Bulletin AF-0302

American Fan Company

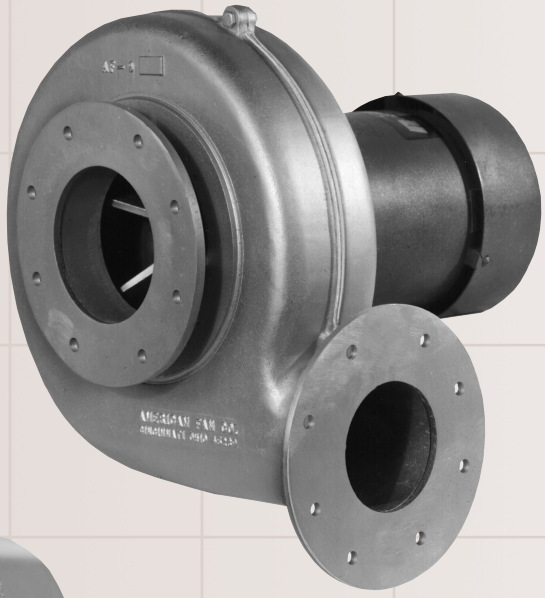

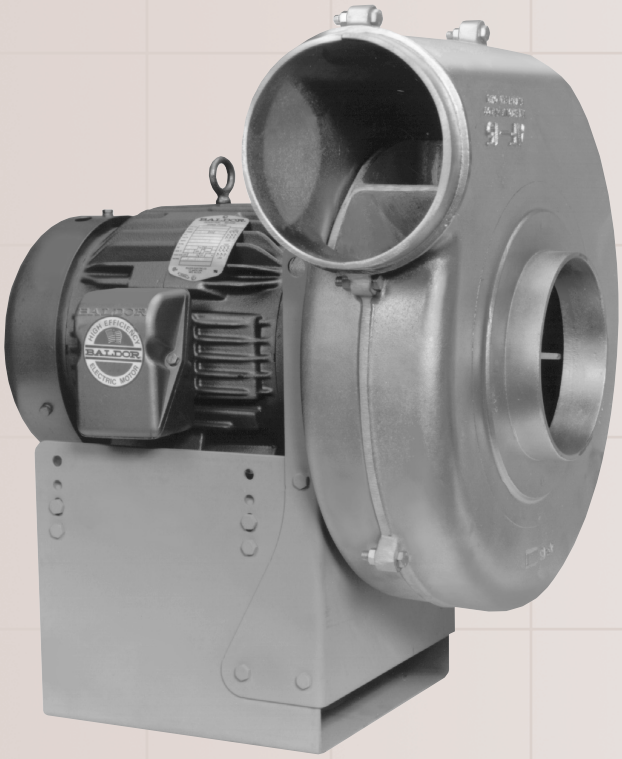

AF CAST ALUMINUM PRESSURE BLOWERS

REG. NO. AQC-19201 ISO 9001 AMERICAN FAN CO.

WHEEL TYPES

Radial Wheel (Code R)

Cast aluminum radial open design for air and light material applications. Also available in welded steel construction.

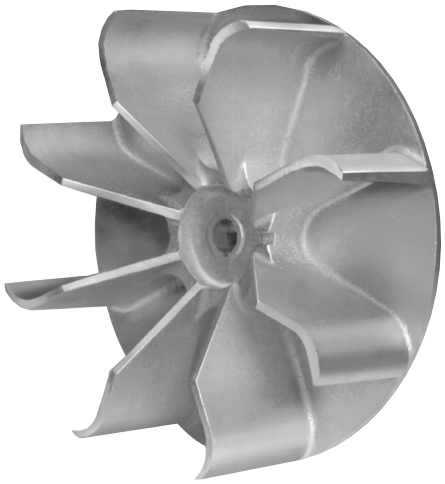

Backward Curve Wheel (Code B)

Cast aluminum backward curve blade tip design for clean air applications where lower noise level is a consideration.

Forward Curve Wheel (Code F)

Fabricated aluminum forward curve with cast iron hub design for clean air applications. Has highest performance at a given speed making it ideal for 50 Hz applications where space is a problem.

CONTENTS

Accessories 3
Arrangements 4
Fan Codes 2
Fan Drawings
- Arr't 1 18
- Arr't 2 19
- Arr't 4 w/ base 16
- Arr't 4 Flange Mount 17
- Arr't 8 19
- Arr't 9 18
- Flanges 20
- Dampers 20

Fan Ratings
- 60 Hz 3600 RPM
  - Radial Wheels 5
  - Backward Curve Wheels 7
  - Forward Curve Wheels 9
- 50 Hz 3000 RPM
  - Radial Wheels 10
  - Backward Curve Wheels 12
  - Forward Curve Wheels 13

Wheel Types 2

FAN CODES

AF-12-R13446-7

- Fan Size
- Wheel Type
  - ***R*** = Radial
  - ***B*** = Backward Curve
  - ***F*** = Forward Curve
- Wheel Size Code
- Inlet Diameter

TESTING

All fan/wheel/inlet combinations shown in this catalog have each been thoroughly air and sound performance tested at the American Fan Company Test Laboratory.

Air testing was performed per AMCA 210-85 figure 7, installation type B (free inlet, ducted outlet). Sound testing was performed per AMCA 300-85, installation type B. Fans in this catalog **are not** licensed to bear the AMCA certified ratings seal.

MOTOR SPEEDS

USED FOR DIRECT DRIVE SELECTIONS

BHP Range	60 Hz RPM	50 Hz RPM
up to 2.00	3450	2875
2.01-5.00	3500	2875
5.01 & higher	3515	2900

FEATURES

Model AF features a rugged, lightweight and rustproof cast aluminum housing making it ideal for demanding industrial applications. Model AF is available in direct or belt drive with a variety of accessories to meet your requirements.

Capacity selections are available up to 4000 CFM and pressure selections up to 20" SP w.g.

- Split housing for maintenance ease
- Even O.D. pipe sizes on inlet and outlet
- Non-sparking cast aluminum housing
- Assortment of wheel sizes to pin-point your performance requirement
- Reliability
- Wheel both statically and dynamically balanced
- Rustproof
- Low initial cost
- Available in arrangements 1,2,4,8 and 9

APPLICATIONS

- Rubber processing
- Food processing
- Chemical processing
- Fume control
- Dust control
- Combustion air for incinerators, ovens, furnaces, kilns and dryers
- Paper and printing machinery
- Cooling electronic equipment, motors, generators and transformers
- Textile machinery
- Light materials conveying
- Woodworking machinery
- Forced drying

OPTIONS

- Inlet flange
- Outlet flange
- Housing drain
- Cast Iron housing
- Fabricated steel wheel
- Shaft seal
- Sound attenuator
- Inlet filter
- Corrosive resistant coatings
- Inlet and/or outlet guard
- Fabricated stainless wheel and housing
- Full or half cut-off
- Heat slinger
- Drive guard system

Inlet Venturi
(shown with inlet guard)

Spun steel venturi provides efficient smooth airflow into fan inlet on non inlet-ducted applications.

Inlet Guard
(shown welded to inlet venturi)

1" square wire cloth is welded to large end of inlet venturi providing OSHA type guarding with minimal airflow restriction.

Inlet Filter

Oil wetted, crimped steel wire mesh media provides 94% filtration efficiency of particulate of 10 micron or larger. Filters are cleanable and reusable.

Full Cut-off Damper
(shown mounted to fan inlet)

Cast aluminum housing with steel gate allows manual adjustment of CFM. Thumbscrew locks gate in place. Can be mounted on inlet or outlet.

Flanges
(outlet flange shown)

Cast aluminum flange matches ANSI flange bolt patterns. Available with either ANSI mounting hole diameters or 7⁄16" diameter (standard).

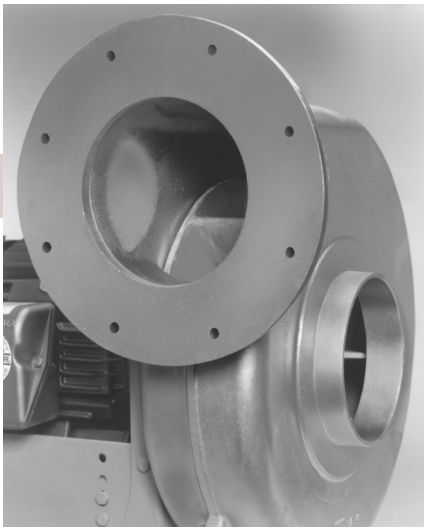

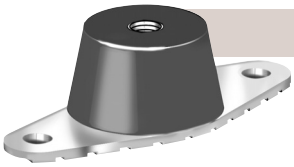

Vibration Isolators

Neoprene isolators with molded-in steel mounting plate and threaded top mounting hole. Provides ¼" static deflection.

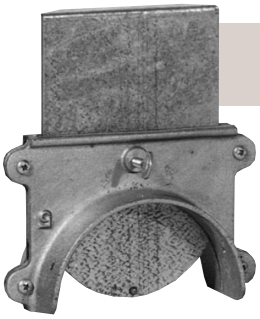

Half Cut-off Dampers

Similar to full cut-offs except half cut-offs are saddle mounted to ductwork on inlet or outlet.

ARRANGEMENTS

ARRT. 1
AF-12 Shown CW-TH

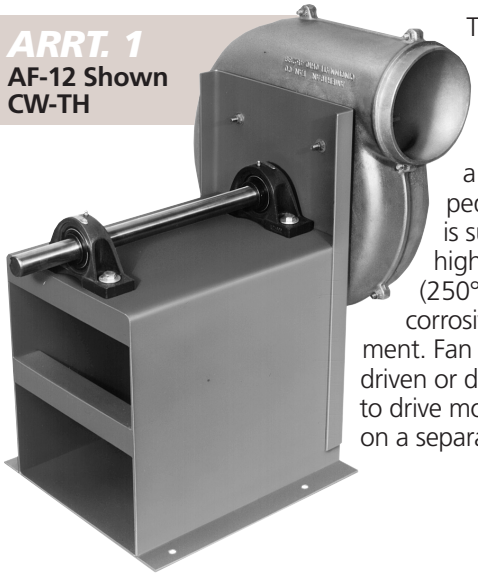

The fan wheel is overhung with both bearings mounted on a common pedestal. ARRT. 1 is suitable for high temperature (250°F max.) and/or corrosive environment. Fan can be belt driven or directly coupled to drive motor mounted on a separate base.

ARRT. 2
AF-12 Shown CCW-BH

The fan wheel is overhung with both bearings mounted in a cast iron housing supported by the fan housing and a cast aluminum base. Unit can be either belt driven or direct coupled to an independently supported motor.

ARRT. 4
AF-9 Shown CW-TH with cast alum. base

ARRT. 4
AF-15 Shown CW-TH with steel base

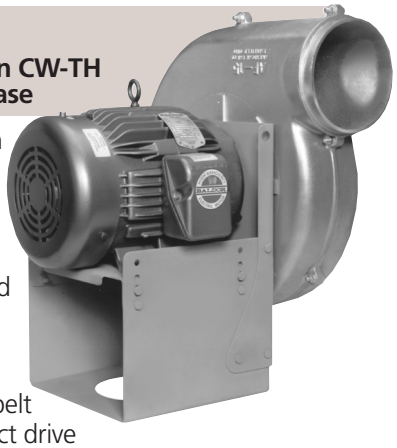

Direct drive fan with wheel mounted directly on motor shaft. Unit is designed for standard temperature applications only. With no belt losses, the direct drive fan operates at a higher efficiency.

ARRT. 4 FLANGE MOUNT AF-9 Shown CW-FM

Direct drive fan with wheel mounted directly on motor shaft. Unit is designed to be supported by the outlet flange.

ARRT. 8 AF-12 CCW-UB with optional cast iron housing, heat slinger, and TEXP motor shown

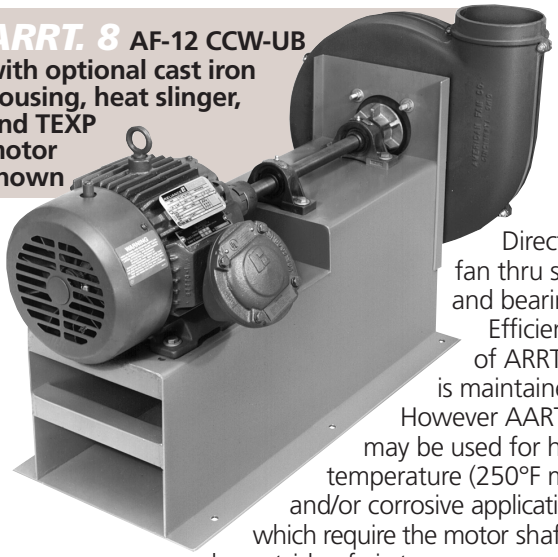

Direct drive fan thru shaft and bearings. Efficiency of ARRT. 4 is maintained. However AART. 8 may be used for high temperature (250°F max.) and/or corrosive applications which require the motor shaft to be outside of airstream.

ARRT. 9
AF-12 Shown CW-TH with OSHA type belt and shaft guards

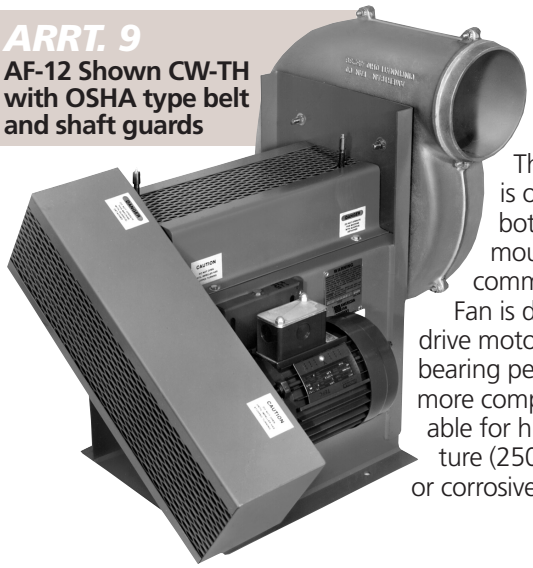

The fan wheel is overhung with both bearings mounted on a common pedestal. Fan is driven with drive motor mounted on bearing pedestal for a more compact unit suitable for high temperature (250°F max.) and/or corrosive environment.

Radial Wheels 3600 RPM 60 Hz

CFM	BHP	MODEL	DBA @ 5'	CURVE NO.	% OF PEAK SP	INLET DIA.	OUTLET DIA.
1.0" SP							
209	.196	8-R07025-3	83	1	28	3	4
248	.246	8-R08113-3	84	3	24	3	4
251	.265	8-R08125-3	83	5	21	3	4
271	.220	8-R07025-4	83	2	31	4	4
320	.292	8-R08113-4	83	4	25	4	4
369	.338	8-R08125-4	84	6	23	4	4
1.5" SP							
186	.192	8-R07025-3	83	1	43	3	4
229	.238	8-R08113-3	84	3	35	3	4
234	.261	8-R08125-3	83	5	32	3	4
241	.206	8-R07025-4	83	2	46	4	4
294	.280	8-R08113-4	83	4	37	4	4
342	.330	8-R08125-4	84	6	35	4	4
424	.506	9-R09026-4	85	7	27	4	4
465	.517	9-R09026-5	88	8	28	5	4
477	.706	9-R10413-4	86	11	22	4	4
488	.691	9-R09626-4	88	9	23	4	4
529	.760	9-R10413-5	88	12	23	5	4
541	.758	9-R09626-5	90	10	24	5	4
570	.876	9-R10527-4	91	13	20	4	4
626	.952	9-R10527-5	92	14	20	5	4
795	1.337	10-R10527-6	92	15	20	6	5
2.0" SP							
161	.185	8-R07025-3	83	1	57	3	4
206	.190	8-R07025-4	83	2	61	4	4
218	.255	8-R08125-3	83	5	43	3	4
265	.264	8-R08113-4	83	4	50	4	4
309	.319	8-R08125-4	84	6	46	4	4
402	.482	9-R09026-4	85	7	36	4	4
433	.663	9-R10413-4	86	11	29	4	4
439	.492	9-R09026-5	86	8	37	5	4
467	.669	9-R09626-4	88	9	30	4	4
507	.741	9-R10413-5	88	12	30	5	4
517	.728	9-R09626-5	89	10	32	5	4
549	.848	9-R10527-4	91	13	26	4	4
606	.926	9-R10527-5	90	14	26	5	4
761	1.300	10-R10527-6	89	15	27	6	5
793	1.464	10-R11027-6	90	16	25	6	5
797	1.801	10-R12213-6	91	18	21	6	5
877	1.781	10-R11527-6	90	17	22	6	5
1219	2.536	12-R11527-7	92	20	21	7	6
2.5" SP							
125	.169	8-R07025-3	83	1	71	3	4
158	.169	8-R07025-4	83	2	76	4	4
174	.209	8-R08113-3	82	3	59	3	4
201	.249	8-R08125-3	83	5	53	3	4
231	.246	8-R08113-4	82	4	62	4	4
275	.302	8-R08125-4	84	6	58	4	4
378	.454	9-R09026-4	85	7	45	4	4
412	.468	9-R09026-5	86	8	46	5	4
443	.644	9-R09626-4	86	9	38	4	4
482	.715	9-R10413-5	86	12	38	5	4
492	.699	9-R09626-5	89	10	40	5	4
527	.820	9-R10527-4	90	13	33	4	4
583	.897	9-R10527-5	89	14	32	5	4
723	1.267	10-R10527-6	89	15	33	6	5
764	1.404	10-R11027-6	90	16	31	6	5
771	1.759	10-R12213-6	90	18	26	6	5
849	1.735	10-R11527-6	90	17	27	6	5
946	2.264	10-R12227-6	94	19	23	6	5
1173	2.456	12-R11527-7	91	20	26	7	6
1309	3.101	12-R12327-7	91	21	23	7	6
1444	3.715	12-R13032-7	96	22	21	7	6
3.0" SP							
78	.145	8-R07025-3	82	1	85	3	4
90	.143	8-R07025-4	83	2	92	4	4
138	.189	8-R08113-3	82	3	71	3	4
179	.241	8-R08125-3	83	5	64	3	4
183	.215	8-R08113-4	84	4	74	4	4
238	.279	8-R08125-4	84	6	69	4	4
354	.427	9-R09026-4	85	7	54	4	4
385	.446	9-R09026-5	87	8	55	5	4

CFM	BHP	MODEL	DBA @ 5'	CURVE NO.	% OF PEAK SP	INLET DIA.	OUTLET DIA.
3.0" SP *(continued)*							
421	.620	9-R09626-4	86	9	45	4	4
454	.685	9-R10413-5	86	12	46	5	4
465	.668	9-R09626-5	87	10	47	5	4
508	.793	9-R10527-4	89	13	39	4	4
558	.864	9-R10527-5	89	14	39	5	4
685	1.223	10-R10527-6	89	15	40	6	5
735	1.342	10-R11027-6	89	16	37	6	5
823	1.677	10-R11527-6	90	17	32	6	5
922	2.225	10-R12227-6	94	19	28	6	5
1128	2.372	12-R11527-7	91	20	31	7	6
1270	3.010	12-R12327-7	93	21	28	7	6
1405	3.618	12-R13032-7	95	22	25	7	6
1465	3.833	12-R14016-7	93	24	23	7	6
1578	4.137	12-R13722-7	95	23	23	7	6
1638	4.754	12-R14032-7	102	25	21	7	6
3.5" SP							
92	.164	8-R08113-3	82	3	82	3	4
114	.176	8-R08113-4	84	4	87	4	4
147	.226	8-R08125-3	83	5	75	3	4
195	.250	8-R08125-4	84	6	81	4	4
330	.400	9-R09026-4	85	7	63	4	4
359	.424	9-R09026-5	87	8	65	5	4
401	.599	9-R09626-4	86	9	53	4	4
423	.654	9-R10413-4	86	12	53	4	4
435	.637	9-R09626-5	87	10	55	5	4
487	.766	9-R10527-4	89	13	46	4	4
533	.830	9-R10527-5	89	14	45	5	4
647	1.169	10-R10527-6	89	15	47	6	5
705	1.283	10-R11027-6	89	16	43	6	5
797	1.610	10-R11527-6	90	17	38	6	5
900	2.175	10-R12227-6	93	19	32	6	5
1082	2.288	12-R11527-7	90	20	37	7	6
1232	2.920	12-R12327-7	92	21	33	7	6
1367	3.518	12-R13032-7	94	22	30	7	6
1437	3.756	12-R14016-7	93	24	27	7	6
1542	4.045	12-R13722-7	94	23	27	7	6
1600	4.659	12-R14032-7	102	25	25	7	6
4.0" SP							
89	.192	8-R08125-3	84	5	85	3	4
133	.207	8-R08125-4	83	6	92	4	4
302	.371	9-R09026-4	83	7	72	4	4
327	.399	9-R09026-5	87	8	74	5	4
348	.593	9-R10413-4	86	11	58	4	4
381	.578	9-R09626-4	86	9	61	4	4
405	.604	9-R09626-5	87	10	63	5	4
463	.736	9-R10527-4	88	13	52	4	4
508	.797	9-R10527-5	88	14	52	5	4
609	1.104	10-R10527-6	88	15	53	6	5
675	1.228	10-R11027-6	88	16	50	6	5
771	1.548	10-R11527-6	89	17	43	6	5
879	2.122	10-R12227-6	93	19	37	6	5
1032	2.206	12-R11527-7	90	20	42	7	6
1192	2.830	12-R12327-7	91	21	37	7	6
1327	3.417	12-R13032-7	93	22	34	7	6
1407	3.677	12-R14016-7	93	24	31	7	6
1504	3.949	12-R13722-7	94	23	31	7	6
1566	4.575	12-R14032-7	101	25	28	7	6
4.5" SP							
34	.155	8-R08125-3	83	5	96	3	4
268	.339	9-R09026-4	83	7	81	4	4
283	.359	9-R09026-5	87	8	83	5	4
317	.563	9-R10413-4	85	11	65	4	4
344	.592	9-R10413-5	86	12	69	5	4
358	.553	9-R09626-4	86	9	68	4	4
377	.574	9-R09626-5	87	10	71	5	4
436	.704	9-R10527-4	87	13	59	4	4
483	.763	9-R10527-5	88	14	58	5	4

CFM	BHP	MODEL	DBA @ 5'	CURVE NO.	% OF PEAK SP	INLET DIA.	OUTLET DIA.
4.5" SP *(continued)*							
570	1.011	10-R10527-6	88	15	60	6	5
643	1.176	10-R11027-6	88	16	56	6	5
743	1.489	10-R11527-6	89	17	49	6	5
857	2.069	10-R12227-6	92	19	41	6	5
982	2.125	12-R11527-7	89	20	47	7	6
1149	2.739	12-R12327-7	91	21	42	7	6
1288	3.315	12-R13032-7	93	22	38	7	6
1376	3.597	12-R14016-7	92	24	35	7	6
1465	3.833	12-R13722-7	93	23	35	7	6
1537	4.502	12-R14032-7	101	25	32	7	6
5.0" SP							
204	.293	9-R09026-4	83	7	91	4	4
222	.307	9-R09026-5	86	8	92	5	4
277	.529	9-R10413-4	85	11	72	4	4
292	.552	9-R10413-5	86	12	76	5	4
325	.515	9-R09626-4	86	9	76	4	4
344	.539	9-R09626-5	87	10	79	5	4
410	.673	9-R10527-4	87	13	65	4	4
457	.728	9-R10527-5	86	14	65	5	4
534	.940	10-R10527-6	88	15	67	6	5
611	1.128	10-R11027-6	88	16	62	6	5
715	1.435	10-R11527-6	88	17	54	6	5
834	2.014	10-R12227-6	92	19	46	6	5
934	2.043	12-R11527-7	89	20	52	7	6
1100	2.648	12-R12327-7	90	21	47	7	6
1247	3.211	12-R13032-7	92	22	42	7	6
1341	3.509	12-R14016-7	92	24	39	7	6
1425	3.712	12-R13722-7	93	23	39	7	6
1506	4.426	12-R14032-7	100	25	35	7	6
5.5" SP							
217	.489	9-R10413-4	85	11	79	4	4
280	.468	9-R09626-4	86	9	83	4	4
294	.488	9-R09626-5	87	10	87	5	4
387	.646	9-R10527-4	87	13	72	4	4
430	.694	9-R10527-5	86	14	71	5	4
507	.926	10-R10527-6	88	15	73	6	5
579	1.090	10-R11027-6	87	16	68	6	5
686	1.386	10-R11527-6	88	17	60	6	5
809	1.959	10-R12227-6	92	19	50	6	5
891	1.966	12-R11527-7	88	20	58	7	6
1052	2.555	12-R12327-7	89	21	51	7	6
1205	3.106	12-R13032-7	92	22	47	7	6
1303	3.416	12-R14016-7	92	24	43	7	6
1383	3.592	12-R13722-7	91	23	43	7	6
1475	4.346	12-R14032-7	100	25	39	7	6
6.0" SP							
147	.435	9-R10413-4	85	11	87	4	4
154	.440	9-R10413-5	86	12	91	5	4
201	.391	9-R09626-4	86	9	91	4	4
221	.412	9-R09626-5	86	10	95	5	4
360	.616	9-R10527-4	87	13	78	4	4
399	.656	9-R10527-5	86	14	78	5	4
476	.897	10-R10527-6	88	15	80	6	5
545	1.054	10-R11027-6	87	16	74	6	5
563	1.355	10-R12213-6	88	18	63	6	5
655	1.342	10-R11527-6	88	17	65	6	5
784	1.902	10-R12227-6	91	19	55	6	5
846	1.886	12-R11527-7	88	20	63	7	6
1005	2.461	12-R12327-7	89	21	56	7	6
1163	3.001	12-R13032-7	90	22	51	7	6
1264	3.321	12-R14016-7	91	24	47	7	6
1339	3.474	12-R13722-7	92	23	46	7	6
1442	4.262	12-R14032-7	99	25	42	7	6
6.5" SP							
147	.435	9-R10413-4	85	11	94	4	4
323	.575	9-R10527-4	86	13	85	4	4
357	.608	9-R10527-5	86	14	84	5	4
430	.810	10-R10527-6	88	15	87	6	5
510	.998	10-R11027-6	87	16	81	6	5
511	1.219	10-R12213-6	88	18	68	6	5
624	1.318	10-R11527-6	88	17	70	6	5

Radial Wheels 3600 RPM 60 Hz

CFM	BHP	MODEL	DBA @ 5'	CURVE NO.	% OF PEAK SP	INLET DIA.	OUTLET DIA.
6.5" SP *(continued)*							
756	1.844	10-R12227-6	91	19	60	6	5
798	1.803	12-R11527-7	88	20	68	7	6
964	2.365	12-R12327-7	88	21	60	7	6
1119	2.894	12-R13032-7	90	22	55	7	6
1222	3.224	12-R14016-7	91	24	51	7	6
1293	3.357	12-R13722-7	92	23	50	7	6
1408	4.174	12-R14032-7	98	25	46	7	6
1782	5.014	15-R13446-7	91	26	48	7	8
1863	5.339	15-R13446-8	91	27	50	8	8
1999	5.572	15-R13446-10	91	28	50	10	8
7.0" SP							
263	.511	9-R10527-4	86	13	91	4	4
297	.545	9-R10527-5	86	14	91	5	4
356	.657	10-R10527-6	88	15	93	6	5
469	.924	10-R11027-6	87	16	87	6	5
591	1.286	10-R11527-6	87	17	76	6	5
727	1.784	10-R12227-6	91	19	64	6	5
748	1.718	12-R11527-7	88	20	73	7	6
922	2.268	12-R12327-7	88	21	65	7	6
1073	2.784	12-R13032-7	90	22	59	7	6
1177	3.123	12-R14016-7	91	24	55	7	6
1244	3.243	12-R13722-7	91	23	54	7	6
1373	4.080	12-R14032-7	98	25	49	7	6
1711	4.833	15-R13446-7	90	26	51	7	8
1798	5.147	15-R13446-8	91	27	53	8	8
1812	5.224	15-R14133-7	91	29	50	7	8
1923	5.356	15-R13446-10	90	28	54	10	8
1963	5.723	15-R14133-8	91	30	51	8	8
2034	5.960	15-R14133-10	91	31	53	10	8
7.5" SP							
182	.430	9-R10527-4	86	13	98	4	4
217	.465	9-R10527-5	86	14	97	5	4
404	.820	10-R11027-6	87	16	93	6	5
554	1.234	10-R11527-6	87	17	81	6	5
694	1.721	10-R12227-6	90	19	69	6	5
695	1.631	12-R11527-7	88	20	79	7	6
878	2.170	12-R12327-7	88	21	70	7	6
1024	2.672	12-R13032-7	90	22	64	7	6
1129	3.019	12-R14016-7	90	24	59	7	6
1193	3.131	12-R13722-7	91	23	58	7	6
1335	3.981	12-R14032-7	98	25	53	7	6
1639	4.642	15-R13446-7	90	26	55	7	8
1736	4.946	15-R13446-8	90	27	57	8	8
1755	5.036	15-R14133-7	91	29	53	7	8
1848	5.140	15-R13446-10	90	28	58	10	8
1893	5.497	15-R14133-8	91	30	55	8	8
1946	5.646	15-R14133-10	91	31	57	10	8
8.0" SP							
273	.865	10-R12213-6	88	18	84	6	5
512	1.160	10-R11527-6	87	17	87	6	5
634	1.533	12-R11527-7	88	20	84	7	6
658	1.655	10-R12227-6	89	19	73	6	5
830	2.070	12-R12327-7	88	21	74	7	6
978	2.562	12-R13032-7	89	22	68	7	6
1076	2.911	12-R14016-7	90	24	63	7	6
1138	3.030	12-R13722-7	90	23	62	7	6
1295	3.874	12-R14032-7	98	25	57	7	6
1575	4.432	15-R13446-7	90	26	59	7	8
1675	4.737	15-R13446-8	90	27	61	8	8
1696	4.845	15-R14133-7	91	29	57	7	8
1769	4.914	15-R13446-10	90	28	62	10	8
1820	5.266	15-R14133-8	91	30	59	8	8
1858	5.340	15-R14133-10	91	31	61	10	8
1921	6.959	15-R15234-7	93	32	47	7	8
2166	7.969	15-R15234-8	94	33	48	8	8
2285	8.181	15-R15234-10	94	34	51	10	8
8.5" SP							
207	.753	10-R12213-6	88	18	89	6	5
450	1.032	10-R11527-6	87	17	92	6	5
563	1.419	12-R11527-7	87	20	78	7	6
622	1.593	10-R12227-6	89	19	78	6	5

CFM	BHP	MODEL	DBA @ 5'	CURVE NO.	% OF PEAK SP	INLET DIA.	OUTLET DIA.
8.5" SP *(continued)*							
778	1.982	12-R12327-7	88	21	79	7	6
940	2.456	12-R13032-7	89	22	72	7	6
1071	2.801	12-R14016-7	90	24	66	7	6
1078	2.932	12-R13722-7	90	23	66	7	6
1253	3.760	12-R14032-7	97	25	60	7	6
1508	4.216	15-R13446-7	91	26	62	7	8
1610	4.522	15-R13446-8	90	27	65	8	8
1635	4.650	15-R14133-7	92	29	60	7	8
1686	4.677	15-R13446-10	90	28	66	10	8
1743	5.030	15-R14133-8	91	30	62	8	8
1768	5.042	15-R14133-10	91	31	65	10	8
1858	6.694	15-R15234-7	93	32	49	7	8
2013	7.771	15-R16422-7	93	38	49	7	8
2092	7.675	15-R15234-8	94	33	51	8	8
2164	8.423	15-R16422-8	94	39	51	8	8
2209	7.865	15-R15234-10	93	34	54	10	8
2274	8.594	15-R16422-10	94	40	51	10	8
9.0" SP							
151	.679	10-R12213-6	88	18	95	6	5
351	.826	10-R11527-6	86	17	97	6	5
470	1.269	12-R11527-7	87	20	94	7	6
589	1.544	10-R12227-6	88	19	83	6	5
721	1.887	12-R12327-7	88	21	84	7	6
906	2.354	12-R13032-7	88	22	76	7	6
952	2.676	12-R14016-7	89	24	70	7	6
1078	2.932	12-R13722-7	90	23	70	7	6
1203	3.623	12-R14032-7	96	25	64	7	6
1437	3.995	15-R13446-7	92	26	66	7	8
1540	4.299	15-R13446-8	91	27	69	8	8
1570	4.450	15-R14133-7	92	29	64	7	8
1598	4.427	15-R13446-10	90	28	70	10	8
1663	4.787	15-R14133-8	91	30	66	8	8
1677	4.753	15-R14133-10	91	31	68	10	8
1796	6.421	15-R15234-7	93	32	52	7	8
1960	7.565	15-R16422-7	93	38	52	7	8
2021	7.335	15-R15234-8	93	33	54	8	8
2084	7.922	15-R15550-7	93	35	50	7	8
2122	8.204	15-R16422-8	94	39	54	8	8
2137	7.548	15-R15234-10	93	34	57	10	8
2227	8.386	15-R16422-10	94	40	54	10	8
2324	8.893	15-R15550-8	96	36	52	8	8
2516	8.911	15-R15550-10	96	37	52	10	8
9.5" SP							
549	1.476	10-R12227-6	88	19	87	6	5
655	1.777	12-R12327-7	88	21	88	7	6
868	2.248	12-R13032-7	88	22	81	7	6
878	2.516	12-R14016-7	89	24	74	7	6
955	2.648	12-R13722-7	89	23	74	7	6
1149	3.471	12-R14032-7	95	25	67	7	6
1359	3.769	15-R13446-7	93	26	70	7	8
1462	4.065	15-R13446-8	91	27	73	8	8
1500	4.245	15-R14133-7	93	29	68	7	8
1502	4.137	15-R13446-10	90	28	74	10	8
1577	4.535	15-R14133-8	91	30	70	8	8
1594	4.490	15-R14133-10	91	31	73	10	8
1733	6.148	15-R15234-7	93	32	55	7	8
1905	7.352	15-R16422-7	92	38	55	7	8
1950	6.982	15-R15234-8	93	33	57	8	8
2037	7.704	15-R15550-7	93	35	52	7	8
2062	7.226	15-R15234-10	94	34	61	10	8
2078	7.980	15-R16422-8	93	39	56	8	8
2176	8.167	15-R16422-10	94	40	57	10	8
2271	8.622	15-R15550-8	96	36	55	8	8
2447	8.702	15-R15550-10	96	37	55	10	8
10.0" SP							
488	1.316	10-R12227-6	88	19	92	6	5
575	1.640	12-R12327-7	87	21	93	7	6

CFM	BHP	MODEL	DBA @ 5'	CURVE NO.	% OF PEAK SP	INLET DIA.	OUTLET DIA.
10.0" SP *(continued)*							
795	2.335	12-R14016-7	89	24	78	7	6
824	2.138	12-R13032-7	88	22	85	7	6
887	2.483	12-R13722-7	88	23	77	7	6
1098	3.329	12-R14032-7	94	25	71	7	6
1265	3.540	15-R13446-7	94	26	73	7	8
1357	3.806	15-R13446-8	91	27	76	8	8
1397	3.831	15-R13446-10	90	28	78	10	8
1424	4.046	15-R14133-7	93	29	71	7	8
1485	4.274	15-R14133-8	91	30	73	8	8
1508	4.231	15-R14133-10	91	31	76	10	8
1667	5.874	15-R15234-7	93	32	58	7	8
1849	7.130	15-R16422-7	92	38	58	7	8
1875	6.630	15-R15234-8	93	33	60	8	8
1983	6.899	15-R15234-10	94	34	64	10	8
1989	7.484	15-R15550-7	93	35	55	7	8
2030	7.748	15-R16422-8	93	39	59	8	8
2119	7.932	15-R16422-10	93	40	60	10	8
2216	8.347	15-R15550-8	95	36	58	8	8
2276	9.279	15-R16550-7	95	41	50	7	8
2377	8.484	15-R15550-10	95	37	58	10	8
2572	10.454	15-R16550-8	96	42	50	8	8
2800	10.845	15-R16550-10	98	43	50	10	8
11.0" SP							
679	1.885	12-R13032-7	87	22	93	7	6
718	2.143	12-R13722-7	88	23	85	7	6
1015	3.089	12-R14032-7	92	25	78	7	6
1041	3.036	15-R13446-7	96	26	81	7	8
1110	3.206	15-R13446-8	92	27	84	8	8
1148	3.189	15-R13446-10	90	28	85	10	8
1248	3.608	15-R14133-7	95	29	78	7	8
1282	3.719	15-R14133-8	91	30	80	8	8
1315	3.713	15-R14133-10	91	31	84	10	8
1533	5.343	15-R15234-7	93	32	64	7	8
1714	5.930	15-R15234-8	93	33	66	8	8
1736	6.663	15-R16422-7	92	38	64	7	8
1809	6.222	15-R15234-10	94	34	70	10	8
1886	7.043	15-R15550-7	92	35	61	7	8
1905	7.243	15-R16422-8	94	39	65	8	8
1918	7.218	15-R16422-10	93	40	66	10	8
2096	7.781	15-R15550-8	95	36	63	8	8
2203	8.988	15-R16550-7	94	41	55	7	8
2226	8.016	15-R15550-10	94	37	63	10	8
2483	9.918	15-R16550-8	96	42	56	8	8
2656	10.312	15-R16550-10	98	43	55	10	8
12.0" SP							
371	1.495	12-R14016-7	88	24	94	7	6
531	1.731	12-R13722-7	88	23	93	7	6
785	2.434	15-R13446-7	93	26	88	7	8
787	2.474	15-R13446-10	88	28	93	10	8
821	2.459	15-R13446-8	89	27	92	8	8
919	2.832	12-R14032-7	90	25	85	7	6
1025	3.052	15-R14133-7	96	29	85	7	8
1051	3.133	15-R14133-8	90	30	88	8	8
1084	3.246	15-R14133-10	92	31	91	10	8
1398	4.844	15-R15234-7	94	32	70	7	8
1531	5.280	15-R15234-8	93	33	72	8	8
1584	5.440	15-R15234-10	95	34	77	10	8
1605	6.145	15-R16422-7	92	38	70	7	8
1704	6.467	15-R16422-10	93	40	72	10	8
1759	6.680	15-R16422-8	95	39	71	8	8
1771	6.603	15-R15550-7	92	35	66	7	8
1945	7.164	15-R15550-8	95	36	69	8	8
2057	7.471	15-R15550-10	95	37	69	10	8
2123	8.735	15-R16550-7	94	41	60	7	8
2321	9.413	15-R16550-8	95	42	61	8	8
2506	9.861	15-R16550-10	97	43	60	10	8
13.0" SP							
615	2.042	15-R14133-7	91	29	92	7	8
688	2.268	15-R14133-8	89	30	95	8	8
779	2.520	12-R14032-7	90	25	92	7	6
1236	4.293	15-R15234-7	94	32	76	7	8
1318	4.586	15-R15234-8	93	33	78	8	8
1339	4.677	15-R15234-10	95	34	83	10	8

Radial Wheels 3600 RPM 60 Hz

CFM	BHP	MODEL	DBA @ 5'	CURVE NO.	% OF PEAK SP	INLET DIA.	OUTLET DIA.
13.0" SP *(continued)*							
1426	5.464	15-R16422-7	92	38	76	7	8
1487	5.698	15-R16422-10	93	40	78	10	8
1545	5.917	15-R16422-8	96	39	77	8	8
1771	6.603	15-R15550-7	92	35	72	7	8
1779	6.524	15-R15550-8	95	36	75	8	8
1873	6.883	15-R15550-10	96	37	75	10	8
2035	8.445	15-R16550-7	94	41	65	7	8
2173	8.927	15-R16550-8	94	42	66	8	8
2360	9.419	15-R16550-10	96	43	66	10	8
14.0" SP							
541	1.905	12-R14032-7	92	25	99	7	6
984	3.556	15-R15234-7	93	32	82	7	8
1040	3.777	15-R15234-8	92	33	84	8	8
1089	4.003	15-R15234-10	93	34	89	10	8
1178	4.602	15-R16422-7	92	38	81	7	8
1225	4.842	15-R16422-10	94	40	84	10	8
1233	4.909	15-R16422-8	97	39	83	8	8
1473	5.608	15-R15550-7	91	35	77	7	8
1586	5.859	15-R15550-8	95	36	81	8	8
1678	6.255	15-R15550-10	96	37	81	10	8
1934	8.093	15-R16550-7	93	41	70	7	8
2060	8.503	15-R16550-8	93	42	71	8	8
2223	9.009	15-R16550-10	94	43	71	10	8

CFM	BHP	MODEL	DBA @ 5'	CURVE NO.	% OF PEAK SP	INLET DIA.	OUTLET DIA.
15.0" SP							
676	2.814	15-R15234-8	90	33	90	8	8
687	2.750	15-R15234-7	91	32	87	7	8
731	3.169	15-R15234-10	90	34	96	10	8
817	3.583	15-R16422-7	91	38	87	7	8
836	3.773	15-R16422-8	94	39	89	8	8
855	3.770	15-R16422-10	91	40	90	10	8
1257	5.608	15-R15550-7	91	35	83	7	8
1364	5.136	15-R15550-8	96	36	87	8	8
1457	5.547	15-R15550-10	97	37	86	10	8
1808	7.605	15-R16550-7	93	41	75	7	8
1936	8.050	15-R16550-8	92	42	76	8	8
2074	8.547	15-R16550-10	93	43	76	10	8
16.0" SP							
319	2.035	15-R15234-8	88	33	96	8	8
421	2.106	15-R15234-7	88	32	93	7	8
462	2.500	15-R16422-7	89	38	93	7	8
523	2.791	15-R16422-8	90	39	95	8	8
526	3.114	15-R16422-10	89	40	96	10	8

CFM	BHP	MODEL	DBA @ 5'	CURVE NO.	% OF PEAK SP	INLET DIA.	OUTLET DIA.
16.0" SP *(continued)*							
1029	4.273	15-R15550-7	90	35	88	7	8
1122	4.352	15-R15550-8	94	36	92	8	8
1187	4.667	15-R15550-10	97	37	92	10	8
1666	7.077	15-R165550-7	93	41	80	7	8
1796	7.549	15-R165550-8	92	42	81	8	8
1909	8.005	15-R165550-10	93	43	81	10	8
17.0" SP							
148	1.658	15-R15234-7	87	32	99	7	8
154	1.737	15-R16422-7	88	38	99	7	8
807	3.613	15-R15550-10	95	37	98	10	8
1504	6.526	15-R16550-7	91	41	85	7	8
1612	6.957	15-R16550-8	92	42	86	8	8
1719	7.338	15-R16550-10	92	43	86	10	8
18.0" SP							
1307	5.868	15-R16550-7	96	41	90	7	8
1396	6.232	15-R16550-8	96	42	91	8	8
1497	6.566	15-R16550-10	92	43	91	10	8
19.0" SP							
1029	4.869	15-R16550-7	100	41	95	7	8
1132	5.266	15-R16550-8	100	42	96	8	8
1219	5.601	15-R16550-10	92	43	96	10	8

Backward Curve 3600 RPM 60 Hz

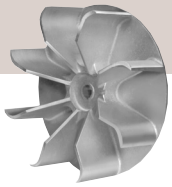

CFM	BHP	MODEL	DBA @ 5'	CURVE NO.	% OF PEAK SP	INLET DIA.	OUTLET DIA.
1.0"SP							
184	.174	8-B07025-3	85	72	30	3	4
219	.226	8-B08125-3	86	74	22	3	4
225	.170	8-B07025-4	84	73	33	4	4
289	.285	8-B08125-4	84	75	24	4	4
1.5"SP							
161	.167	8-B07025-3	85	72	45	3	4
198	.163	8-B07025-4	84	73	49	4	4
202	.221	8-B08125-3	86	74	33	3	4
264	.273	8-B08125-4	84	75	36	4	4
368	.311	9-B08725-4	85	76	28	4	4
383	.319	9-B08725-5	85	77	29	5	4
449	.487	9-B10127-4	86	78	22	4	4
494	.517	9-B10127-5	86	79	23	5	4
571	.836	10-B10127-6	87	80	24	6	5
687	1.151	10-B10727-6	89	81	20	6	5
2.0"SP							
130	.158	8-B07025-3	84	72	60	3	4
161	.150	8-B07025-4	84	73	65	4	4
187	.216	8-B08125-3	86	74	44	3	4
238	.258	8-B08125-4	84	75	48	4	4
344	.299	9-B08725-4	85	76	37	4	4
358	.305	9-B08725-5	85	77	39	5	4
425	.468	9-B10127-4	86	78	29	4	4
469	.500	9-B10127-5	86	79	31	5	4
542	.809	10-B10127-6	86	80	32	6	5
659	1.116	10-B10727-6	88	81	27	6	5
2.5"SP							
97	.145	8-B07025-3	85	72	75	3	4
112	.134	8-B07025-4	84	73	81	4	4
163	.207	8-B08125-3	86	74	55	3	4
209	.242	8-B08125-4	84	75	61	4	4
319	.285	9-B08725-4	85	76	46	4	4
333	.290	9-B08725-5	85	77	49	5	4

CFM	BHP	MODEL	DBA @ 5'	CURVE NO.	% OF PEAK SP	INLET DIA.	OUTLET DIA.
2.5" SP *(continued)*							
400	.447	9-B10127-4	86	78	36	4	4
444	.484	9-B10127-5	86	79	39	5	4
514	.799	10-B10127-6	86	80	41	6	5
632	1.092	10-B10727-6	88	81	34	6	5
1085	2.190	12-B13031-7	91	82	24	7	6
3.0"SP							
36	.114	8-B07025-4	84	73	98	4	4
46	.120	8-B07025-3	85	72	90	3	4
133	.194	8-B08125-3	85	74	66	3	4
171	.220	8-B08125-4	84	75	73	4	4
293	.269	9-B08725-4	85	76	56	4	4
306	.273	9-B08725-5	85	77	59	5	4
373	.425	9-B10127-4	86	78	44	4	4
417	.466	9-B10127-5	86	79	46	5	4
484	.782	10-B10127-6	86	80	49	6	5
605	1.067	10-B10727-6	88	81	41	6	5
1050	2.136	12-B13031-7	91	82	28	7	6
1262	2.962	12-B14132-7	94	83	23	7	6
3.5"SP							
99	.180	8-B08125-3	85	74	77	3	4
120	.193	8-B08125-4	84	75	85	4	4
266	.251	9-B08725-4	85	76	65	4	4
277	.256	9-B08725-5	85	77	68	5	4
345	.401	9-B10127-4	86	78	51	4	4
382	.440	9-B10127-5	86	79	54	5	4
449	.754	10-B10127-6	86	80	57	6	5
576	1.038	10-B10727-6	87	81	47	6	5
1014	2.081	12-B13031-7	90	82	33	7	6
1231	2.901	12-B14132-7	94	83	27	7	6

CFM	BHP	MODEL	DBA @ 5'	CURVE NO.	% OF PEAK SP	INLET DIA.	OUTLET DIA.
4.0"SP							
42	.160	8-B08125-4	83	75	97	4	4
52	.158	8-B08125-3	85	74	88	3	4
232	.229	9-B08725-4	85	76	74	4	4
238	.233	9-B08725-5	85	77	78	5	4
318	.379	9-B10127-4	86	78	58	4	4
351	.411	9-B10127-5	86	79	62	5	4
402	.698	10-B10127-6	86	80	65	6	5
545	1.004	10-B10727-6	87	81	54	6	5
979	2.027	12-B13031-7	90	82	38	7	6
1201	2.851	12-B14132-7	93	83	31	7	6
4.5"SP							
164	.189	9-B08725-4	85	76	84	4	4
174	.193	9-B08725-5	85	77	88	5	4
292	.356	9-B10127-4	86	78	65	4	4
326	.380	9-B10127-5	86	79	70	5	4
362	.643	10-B10127-6	83	80	73	6	5
511	.964	10-B10727-6	86	81	61	6	5
945	1.974	12-B13031-7	90	82	42	7	6
1171	2.805	12-B14132-7	93	83	35	7	6
5.0"SP							
85	.147	9-B08725-5	86	77	98	5	4
89	.150	9-B08725-4	85	76	93	4	4
254	.322	9-B10127-4	86	78	73	4	4
294	.348	9-B10127-5	86	79	77	5	4
326	.596	10-B10127-6	84	80	81	6	5
471	.912	10-B10727-6	84	81	68	6	5
912	1.921	12-B13031-7	89	82	47	7	6
1140	2.756	12-B14132-7	92	83	39	7	6
5.5"SP							
203	.279	9-B10127-4	86	78	80	4	4
226	.314	9-B10127-5	86	79	85	5	4
271	.530	10-B10127-6	83	80	89	6	5
437	.872	10-B10727-6	84	81	74	6	5

Backward Curve 3600 RPM 60 Hz

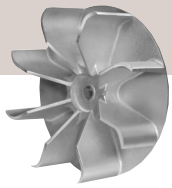

CFM	BHP	MODEL	DBA @ 5'	CURVE NO.	% OF PEAK SP	INLET DIA.	OUTLET DIA.
5.5" SP *(continued)*							
879	1.869	12-B13031-7	89	82	52	7	6
1110	2.706	12-B14132-7	92	83	43	7	6
6.0"SP							
155	.247	9-B10127-4	86	78	87	4	4
168	.274	9-B10127-4	86	79	93	4	4
172	.435	10-B10127-6	83	80	97	6	5
403	.836	10-B10727-6	84	81	81	6	5
847	1.817	12-B13031-7	88	82	57	7	6
1079	2.653	12-B14132-7	91	83	47	7	6
6.5"SP							
63	.204	9-B10127-4	86	78	95	4	4
352	.747	10-B10727-6	84	81	88	6	5
817	1.769	12-B13031-7	88	82	61	7	6
1047	2.597	12-B14132-7	91	83	50	7	6
1394	3.023	15-B14132-10	86	86	53	10	8
7.0"SP							
270	.633	10-B10727-6	84	81	95	6	5
789	1.722	12-B13031-7	88	82	66	7	6
1015	2.539	12-B14132-7	90	83	54	7	6
1308	2.850	15-B14132-7	87	84	51	7	8
1320	2.915	15-B14132-10	86	86	57	10	8
1338	2.900	15-B14132-8	86	85	53	8	8
7.5"SP							
757	1.670	12-B13031-7	88	82	71	7	6
983	2.479	12-B14132-7	90	83	58	7	6
1247	2.812	15-B14132-10	85	86	61	10	8
1253	2.763	15-B14132-7	87	84	54	7	8
1272	2.790	15-B14132-8	85	85	57	8	8
1831	4.992	15-B15247-10	91	89	52	10	8
8.0"SP							
720	1.612	12-B13031-7	88	82	76	7	6
950	2.416	12-B14132-7	90	83	62	7	6
1186	2.726	15-B14132-10	87	86	65	10	8
1195	2.671	15-B14132-7	87	84	58	7	8
1204	2.683	15-B14132-8	85	85	61	8	8
1598	4.480	15-B15247-7	90	87	50	7	8
1674	4.795	15-B15247-8	91	88	52	8	8
1761	4.844	15-B15247-10	91	89	55	10	8
8.5"SP							
673	1.542	12-B13031-7	88	82	80	7	6
919	2.356	12-B14132-7	90	83	66	7	6
1128	2.644	15-B14132-10	87	86	69	10	8
1134	2.574	15-B14132-7	87	84	62	7	8
1138	2.610	15-B14132-8	85	85	64	8	8
1550	4.347	15-B15247-7	89	87	54	7	8
1620	4.632	15-B15247-8	90	88	56	8	8
1699	4.705	15-B15247-10	90	89	58	10	8

CFM	BHP	MODEL	DBA @ 5'	CURVE NO.	% OF PEAK SP	INLET DIA.	OUTLET DIA.
9.0"SP							
617	1.457	12-B13031-7	88	82	85	7	6
886	2.290	12-B14132-7	89	83	70	7	6
1064	2.558	15-B14132-10	87	86	73	10	8
1067	2.466	15-B14132-7	84	84	65	7	8
1069	2.526	15-B14132-8	85	85	68	8	8
1499	4.202	15-B15247-7	89	87	57	7	8
1569	4.453	15-B15247-8	90	88	59	8	8
1634	4.557	15-B15247-10	90	89	62	10	8
9.5"SP							
536	1.330	12-B13031-7	88	82	90	7	6
850	2.213	12-B14132-7	89	83	73	7	6
994	2.467	15-B14132-10	87	86	77	10	8
995	2.351	15-B14132-7	84	84	69	7	8
995	2.428	15-B14132-8	84	85	72	8	8
1439	4.013	15-B15247-7	89	87	60	7	8
1515	4.269	15-B15247-8	89	88	62	8	8
1566	4.397	15-B15247-10	89	89	65	10	8
2244	7.781	15-B16550-10	94	95	51	10	8
10.0"SP							
437	1.189	12-B13031-7	88	82	94	7	6
810	2.109	12-B14132-7	89	83	78	7	6
913	2.367	15-B14132-10	87	86	81	10	8
916	2.315	15-B14132-8	84	85	76	8	8
917	2.226	15-B14132-7	84	84	72	7	8
1374	3.810	15-B15247-7	88	87	63	7	8
1457	4.081	15-B15247-8	89	88	65	8	8
1493	4.224	15-B15247-10	89	89	69	10	8
1896	6.861	15-B16550-7	95	93	51	7	8
2094	7.476	15-B16550-8	94	94	52	8	8
2193	7.620	15-B16550-10	93	95	54	10	8
11.0"SP							
674	2.106	15-B14132-10	86	86	90	10	8
713	1.871	12-B14132-7	89	83	85	7	6
726	1.925	15-B14132-7	84	84	80	7	8
741	2.011	15-B14132-8	84	85	83	8	8
1229	3.398	15-B15247-7	88	87	69	7	8
1320	3.678	15-B15247-8	88	88	72	8	8
1324	3.769	15-B15247-10	88	89	76	10	8
1821	6.603	15-B16550-7	96	93	56	7	8
1992	7.169	15-B16550-8	93	94	57	8	8
2086	7.303	15-B16550-10	93	95	59	10	8
12.0"SP							
293	1.649	15-B14132-10	86	86	98	10	8

CFM	BHP	MODEL	DBA @ 5'	CURVE NO.	% OF PEAK SP	INLET DIA.	OUTLET DIA.
12.0" SP *(continued)*							
483	1.503	15-B14132-7	84	84	87	7	8
484	1.554	15-B14132-8	84	85	91	8	8
561	1.609	12-B14132-7	89	83	93	7	6
1045	2.969	15-B15247-7	87	87	76	7	8
1112	3.185	15-B15247-8	87	88	79	8	8
1119	3.248	15-B15247-10	87	89	83	10	8
1738	6.303	15-B16550-7	97	93	61	7	8
1890	6.819	15-B16550-8	93	94	62	8	8
1973	6.992	15-B16550-10	92	95	64	10	8
13.0"SP							
165	1.100	15-B14132-8	84	85	98	8	8
251	1.139	15-B14132-7	84	84	94	7	8
828	2.504	15-B15247-7	87	87	82	7	8
829	2.610	15-B15247-10	87	89	89	10	8
863	2.647	15-B15247-8	87	88	85	8	8
1641	5.934	15-B16550-7	97	93	66	7	8
1779	6.439	15-B16550-8	92	94	68	8	8
1850	6.647	15-B16550-10	91	95	70	10	8
14.0"SP							
509	2.157	15-B15247-10	87	89	96	10	8
568	1.975	15-B15247-7	87	87	88	7	8
570	2.036	15-B15247-8	87	88	92	8	8
1532	5.543	15-B16550-7	98	93	71	7	8
1655	6.025	15-B16550-8	92	94	73	8	8
1710	6.251	15-B16550-10	91	95	75	10	8
15.0"SP							
225	1.353	15-B15247-8	87	88	98	8	8
306	1.440	15-B15247-7	87	87	94	7	8
1396	5.114	15-B16550-7	98	93	76	7	8
1490	5.503	15-B16550-8	90	94	78	8	8
1537	5.755	15-B16550-10	90	95	81	10	8
16.0"SP							
1213	4.608	15-B16550-7	95	93	81	7	8
1296	4.910	15-B16550-8	92	94	83	8	8
1341	5.189	15-B16550-10	90	95	86	10	8
17.0"SP							
1003	4.026	15-B16550-7	95	93	86	7	8
1071	4.267	15-B16550-8	95	94	88	8	8
1111	4.506	15-B16550-10	89	95	91	10	8
18.0"SP							
751	3.321	15-B16550-7	93	93	91	7	8
789	3.489	15-B16550-8	97	94	93	8	8
801	3.631	15-B16550-10	89	95	97	10	8
19.0"SP							
312	2.170	15-B16550-8	88	94	99	8	8
409	2.388	15-B16550-7	94	93	96	7	8

Forward Curve 3600 RPM 60 Hz

CFM	BHP	MODEL	DBA @ 5'	CURVE NO.	% OF PEAK SP	INLET DIA.	OUTLET DIA.
1.0" SP							
376	.417	8-F07620-3	83	47	20	3	4
592	.884	8-F07620-4	83	48	20	4	4
1.5" SP							
359	.408	8-F07620-3	83	47	30	3	4
565	.846	8-F07620-4	83	48	30	4	4

CFM	BHP	MODEL	DBA @ 5'	CURVE NO.	% OF PEAK SP	INLET DIA.	OUTLET DIA.
2.0" SP							
339	.397	8-F07620-3	82	47	40	3	4
537	.803	8-F07620-4	82	48	40	4	4

CFM	BHP	MODEL	DBA @ 5'	CURVE NO.	% OF PEAK SP	INLET DIA.	OUTLET DIA.
2.0" SP *(continued)*							
762	1.873	9-F10020-4	88	49	23	4	4
894	2.293	9-F10020-5	86	50	23	5	4
2.5" SP							
315	.382	8-F07620-3	82	47	50	3	4
503	.746	8-F07620-4	82	48	50	4	4
743	1.809	9-F10020-4	87	49	29	4	4

Forward Curve 3600 RPM 60 Hz

CFM	BHP	MODEL	DBA @ 5'	CURVE NO.	% OF PEAK SP	INLET DIA.	OUTLET DIA.
2.5" SP *(continued)*							
872	2.231	9-F10020-5	85	50	29	5	4
1253	4.281	10-F10020-6	90	51	27	6	5
1299	4.659	10-F10520-6	90	52	24	6	5
3.0" SP							
288	.363	8-F07620-3	84	47	60	3	4
468	.686	8-F07620-4	82	48	60	4	4
722	1.747	9-F10020-4	87	49	35	4	4
849	2.165	9-F10020-5	85	50	35	5	4
1225	4.145	10-F10020-6	90	51	32	6	5
1273	4.555	10-F10520-6	90	52	29	6	5
3.5" SP							
255	.336	8-F07620-3	83	47	70	3	4
428	.623	8-F07620-4	82	48	70	4	4
699	1.687	9-F10020-4	87	49	41	4	4
826	2.091	9-F10020-5	85	50	41	5	4
1197	4.006	10-F10020-6	90	51	37	6	5
1247	4.446	10-F10520-6	90	52	34	6	5
2240	10.199	12-F12220-7	93	53	25	7	6
2372	10.814	12-F12224-7	95	54	23	7	6
4.0" SP							
216	.297	8-F07620-3	83	47	80	3	4
384	.554	8-F07620-4	82	48	80	4	4
674	1.628	9-F10020-4	86	49	47	4	4
802	2.015	9-F10020-5	85	50	46	5	4
1167	3.863	10-F10020-6	89	51	43	6	5
1220	4.332	10-F10520-6	90	52	38	6	5
2205	10.043	12-F12220-7	93	53	28	7	6
2342	10.653	12-F12224-7	95	54	26	7	6
2413	12.256	12-F13420-7	96	55	24	7	6
4.5" SP							
343	.486	8-F07620-4	83	48	90	4	4
648	1.570	9-F10020-4	86	49	53	4	4
776	1.937	9-F10020-5	85	50	52	5	4
1139	3.711	10-F10020-6	89	51	48	6	5
1195	4.210	10-F10520-6	90	52	43	6	5
2169	9.880	12-F12220-7	93	53	32	7	6
2312	10.489	12-F12224-7	94	54	30	7	6
2385	12.116	12-F13420-7	95	55	27	7	6
2505	12.802	12-F13430-7	97	56	26	7	6
5.0" SP							
619	1.521	9-F10020-4	86	49	61	4	4
749	1.857	9-F10020-5	86	50	58	5	4
1113	3.547	10-F10020-6	89	51	53	6	5
1174	4.078	10-F10520-6	89	52	48	6	5
2132	9.712	12-F12220-7	92	53	35	7	6
2280	10.321	12-F12224-7	94	54	33	7	6
2357	11.975	12-F13420-7	95	55	30	7	6
2468	12.588	12-F13430-7	96	56	28	7	6
5.5"SP							
589	1.465	9-F10020-4	85	49	64	4	4
719	1.774	9-F10020-5	85	50	64	5	4
1087	3.381	10-F10020-6	89	51	59	6	5
1152	3.944	10-F10520-6	89	52	53	6	5
2095	9.538	12-F12220-7	93	53	39	7	6
2248	10.149	12-F12224-7	94	54	36	7	6
2328	11.832	12-F13420-7	95	55	33	7	6
2432	12.376	12-F13430-7	96	56	31	7	6
6.0" SP							
557	1.394	9-F10020-4	85	49	70	4	4
687	1.687	9-F10020-5	85	50	70	5	4
1058	3.214	10-F10020-6	88	51	64	6	5
1129	3.806	10-F10520-6	89	52	58	6	5
2058	9.352	12-F12220-7	92	53	42	7	6
2215	9.973	12-F12224-7	94	54	40	7	6
2299	11.687	12-F13420-7	95	55	36	7	6
2398	12.177	12-F13430-7	96	56	34	7	6
6.5" SP							
528	1.291	9-F10020-4	85	49	76	4	4
655	1.595	9-F10020-5	84	50	75	5	4

CFM	BHP	MODEL	DBA @ 5'	CURVE NO.	% OF PEAK SP	INLET DIA.	OUTLET DIA.
6.5" SP *(continued)*							
1027	3.045	10-F10020-6	88	51	70	6	5
1105	3.665	10-F10520-6	89	52	63	6	5
2021	9.155	12-F12220-7	92	53	46	7	6
2181	9.792	12-F12224-7	93	54	43	7	6
2270	11.540	12-F13420-7	95	55	39	7	6
2370	12.016	12-F13430-7	96	56	37	7	6
7.0" SP							
494	1.178	9-F10020-4	84	49	82	4	4
622	1.503	9-F10020-5	84	50	81	5	4
993	2.874	10-F10020-6	88	51	75	6	5
1078	3.520	10-F10520-6	88	52	67	6	5
1983	8.954	12-F12220-7	92	53	49	7	6
2146	9.599	12-F12224-7	93	54	46	7	6
2241	11.391	12-F13420-7	95	55	42	7	6
2341	11.852	12-F13430-7	95	56	40	7	6
7.5" SP							
452	1.054	9-F10020-4	84	49	88	4	4
585	1.397	9-F10020-5	84	50	87	5	4
956	2.700	10-F10020-6	87	51	80	6	5
1049	3.370	10-F10520-6	88	52	72	6	5
1944	8.747	12-F12220-7	92	53	53	7	6
2110	9.397	12-F12224-7	93	54	50	7	6
2211	11.242	12-F13420-7	95	55	45	7	6
2312	11.683	12-F13430-7	95	56	43	7	6
8.0"SP							
374	.891	9-F10020-4	84	49	93	4	4
537	1.269	9-F10020-5	86	50	93	5	4
914	2.521	10-F10020-6	87	51	86	6	5
1018	3.213	10-F10520-6	88	52	77	6	5
1904	8.534	12-F12220-7	91	53	56	7	6
2072	9.190	12-F12224-7	93	54	53	7	6
2187	11.133	12-F13420-7	95	55	47	7	6
2282	11.510	12-F13430-7	95	56	45	7	6
8.5"SP							
460	1.076	9-F10020-5	86	50	99	5	4
864	2.351	10-F10020-6	87	51	91	6	5
982	3.046	10-F10520-6	88	52	82	6	5
1863	8.316	12-F12220-7	91	53	60	7	6
2033	8.977	12-F12224-7	93	54	56	7	6
2162	11.018	12-F13420-7	95	55	50	7	6
2252	11.333	12-F13430-7	95	56	48	7	6
9.0"SP							
796	2.144	10-F10020-6	86	51	96	6	5
940	2.865	10-F10520-6	87	52	87	6	5
1821	8.092	12-F12220-7	91	53	63	7	6
1993	8.759	12-F12224-7	92	54	59	7	6
2136	10.899	12-F13420-7	95	55	53	7	6
2220	11.151	12-F13430-7	94	56	51	7	6
3517	19.938	15-F15020-10	95	59	50	10	8
3592	23.717	15-F15020-7	98	57	49	7	8
3996	25.498	15-F15020-8	98	58	48	8	8
9.5"SP							
883	2.640	10-F10520-6	86	52	91	6	5
1778	7.860	12-F12220-7	91	53	67	7	6
1951	8.534	12-F12224-7	92	54	63	7	6
2110	10.773	12-F13420-7	94	55	56	7	6
2188	10.963	12-F13430-7	94	56	54	7	6
3471	19.745	15-F15020-10	95	59	53	10	8
3549	23.389	15-F15020-7	98	57	51	7	8
3948	25.168	15-F15020-8	98	58	51	8	8
10.0"SP							
804	2.398	10-F10520-6	86	52	96	6	5
1734	7.621	12-F12220-7	91	53	70	7	6

CFM	BHP	MODEL	DBA @ 5'	CURVE NO.	% OF PEAK SP	INLET DIA.	OUTLET DIA.
10.0" SP *(continued)*							
1907	8.301	12-F12224-7	92	54	66	7	6
2082	10.641	12-F13420-7	94	55	59	7	6
2155	10.770	12-F13430-7	94	56	57	7	6
3424	19.544	15-F15020-10	95	59	56	10	8
3504	23.064	15-F15020-7	98	57	54	7	8
3892	24.813	15-F15020-8	98	58	54	8	8
11.0"SP							
1642	7.118	12-F12220-7	90	53	77	7	6
1814	7.809	12-F12224-7	91	54	73	7	6
2023	10.353	12-F13420-7	94	55	65	7	6
2085	10.364	12-F13430-7	94	56	62	7	6
3321	19.113	15-F15020-10	95	59	61	10	8
3411	22.404	15-F15020-7	98	57	60	7	8
3557	26.860	15-F16420-7	100	66	54	7	8
3762	23.272	15-F15030-7	99	60	53	7	8
3777	24.083	15-F15020-8	97	58	59	8	8
3934	27.232	15-F16420-10	97	68	52	10	8
4153	26.809	15-F15030-10	97	62	52	10	8
4386	29.113	15-F15030-8	99	61	51	8	8
12.0"SP							
1550	6.593	12-F12220-7	87	53	84	7	6
1709	7.271	12-F12224-7	90	54	79	7	6
2010	9.926	12-F13430-7	93	56	68	7	6
3188	18.612	15-F15020-10	95	59	67	10	8
3311	21.704	15-F15020-7	97	57	65	7	8
3467	26.239	15-F16420-7	100	66	59	7	8
3654	23.321	15-F15020-8	97	58	64	8	8
3654	22.457	15-F15030-7	98	60	58	7	8
3844	26.768	15-F16420-10	97	68	56	10	8
4028	29.673	15-F16420-8	99	67	57	8	8
4071	26.097	15-F15030-10	96	62	56	10	8
4264	28.246	15-F15030-8	99	61	55	8	8
13.0"SP							
1438	5.989	12-F12220-7	87	53	91	7	6
1588	6.670	12-F12224-7	89	54	86	7	6
1886	9.646	12-F13420-7	93	55	77	7	6
1928	9.449	12-F13430-7	93	56	74	7	6
3042	18.023	15-F15020-10	95	59	72	10	8
3204	20.953	15-F15020-7	97	57	70	7	8
3372	25.587	15-F16420-7	99	66	64	7	8
3524	22.532	15-F15020-8	97	58	70	8	8
3538	21.612	15-F15030-7	98	60	63	7	8
3738	26.257	15-F16420-10	97	68	61	10	8
3932	29.004	15-F16420-8	98	67	62	8	8
3980	25.373	15-F15030-10	96	62	61	10	8
4135	27.309	15-F15030-8	99	61	60	8	8
14.0"SP							
1220	5.022	12-F12220-7	87	53	98	7	6
1437	5.909	12-F12224-7	89	54	93	7	6
1801	9.186	12-F13420-7	93	55	83	7	6
1838	8.902	12-F13430-7	92	56	79	7	6
2882	17.322	15-F15020-10	95	59	78	10	8
3088	20.130	15-F15020-7	97	57	76	7	8
3271	24.897	15-F16420-7	99	66	68	7	8
3384	21.719	15-F15020-8	96	58	75	8	8
3409	20.719	15-F15030-7	97	60	68	7	8
3601	25.657	15-F16420-10	97	68	66	10	8
3814	28.277	15-F16420-8	98	67	67	8	8
3846	24.721	15-F15030-10	96	62	66	10	8
4000	26.272	15-F15030-8	98	61	64	8	8
15.0"SP							
1735	8.290	12-F13430-7	92	56	85	7	6
2711	16.475	15-F15020-10	94	59	84	10	8
2960	19.226	15-F15020-7	96	57	81	7	8
3163	24.163	15-F16420-7	99	66	73	7	8
3231	20.809	15-F15020-8	96	58	80	8	8
3271	19.794	15-F15030-7	97	60	73	7	8
3456	24.984	15-F16420-10	97	68	70	10	8
3688	27.506	15-F16420-8	98	67	71	8	8
3698	23.979	15-F15030-10	95	62	70	10	8
3855	25.183	15-F15030-8	98	61	69	8	8

Forward Curve 3600 RPM 60 Hz

CFM	BHP	MODEL	DBA @ 5'	CURVE NO.	% OF PEAK SP	INLET DIA.	OUTLET DIA.
16.0"SP							
1525	7.560	12-F13420-7	88	55	95	7	6
1612	7.660	12-F13430-7	88	56	91	7	6
2507	15.418	15-F15020-10	90	59	89	10	8
2813	18.216	15-F15020-7	89	57	87	7	8
3045	23.370	15-F16420-7	99	66	78	7	8
3060	19.764	15-F15020-8	90	58	86	8	8
3122	18.828	15-F15030-7	96	60	78	7	8
3302	24.223	15-F16420-10	97	68	75	10	8
3545	23.103	15-F15030-10	95	62	75	10	8
3551	26.697	15-F16420-8	98	67	76	8	8
3697	24.028	15-F15030-8	97	61	74	8	8
17.0"SP							
1448	6.909	12-F13430-7	89	56	96	7	6
2240	13.987	15-F15020-10	90	59	95	10	8
2638	17.077	15-F15020-7	89	57	92	7	8
2862	18.511	15-F15020-8	90	58	91	8	8

CFM	BHP	MODEL	DBA @ 5'	CURVE NO.	% OF PEAK SP	INLET DIA.	OUTLET DIA.
17.0" SP *(continued)*							
2960	17.885	15-F15030-7	95	60	83	7	8
3394	22.053	15-F15030-10	94	62	80	10	8
3518	22.805	15-F15030-8	97	61	78	8	8
18.0"SP							
2405	15.557	15-F15020-7	90	57	98	7	8
2619	16.959	15-F15020-8	91	58	97	8	8
2776	16.825	15-F15030-7	95	60	87	7	8
2967	22.395	15-F16420-10	97	68	85	10	8
3232	24.825	15-F16420-8	97	67	86	8	8
3248	20.840	15-F15030-10	94	62	84	10	8
3315	21.452	15-F15030-8	96	61	83	8	8

CFM	BHP	MODEL	DBA @ 5'	CURVE NO.	% OF PEAK SP	INLET DIA.	OUTLET DIA.
19.0"SP							
2551	15.529	15-F15030-7	89	60	92	7	8
2594	20.544	15-F16420-7	97	66	93	7	8
2763	21.197	15-F16420-10	97	68	89	10	8
3078	19.480	15-F15030-10	91	62	89	10	8
3086	19.887	15-F15030-8	90	61	87	8	8
20.0"SP							
2235	13.682	15-F15030-7	90	60	97	7	8
2358	18.928	15-F16420-7	92	66	98	7	8
2507	19.736	15-F16420-10	94	68	94	10	8
2817	17.791	15-F15030-8	90	61	92	8	8
2866	17.864	15-F15030-10	91	62	94	10	8
21.0"SP							
2476	15.149	15-F15030-8	91	61	96	8	8
2547	20.277	15-F16420-8	94	67	100	8	8
2550	15.596	15-F15030-10	92	62	99	10	8

Radial Wheels 3000 RPM 50 Hz

CFM	BHP	MODEL	DBA @ 5'	CURVE NO.	% OF PEAK SP	INLET DIA.	OUTLET DIA.
.5"SP							
183	.114	8-R07025-3	78	96	20	3	4
239	.131	8-R07025-4	78	97	22	4	4
1.0" SP							
157	.111	8-R07025-3	78	96	41	3	4
193	.138	8-R08013-3	79	98	34	3	4
197	.151	8-R08025-3	78	100	31	3	4
204	.120	8-R07025-4	78	97	44	4	4
248	.163	8-R08013-4	80	99	36	4	4
288	.192	8-R08025-4	79	101	33	4	4
356	.294	9-R09026-4	80	102	26	4	4
390	.301	9-R09026-5	81	103	27	5	4
1.5" SP							
126	.105	8-R07025-3	78	96	61	3	4
160	.107	8-R07025-4	78	97	66	4	4
165	.129	8-R08013-3	79	98	51	3	4
177	.147	8-R08025-3	78	100	46	3	4
212	.150	8-R08013-4	79	99	54	4	4
249	.182	8-R08025-4	79	101	50	4	4
328	.274	9-R09026-4	80	102	39	4	4
359	.280	9-R09026-5	81	103	40	5	4
375	.393	9-R10413-4	81	106	31	4	4
383	.383	9-R09626-4	81	104	33	4	4
424	.416	9-R09626-5	82	105	34	5	4
451	.486	9-R10527-4	84	108	28	4	4
499	.531	9-R10527-5	83	109	28	5	4
624	.747	10-R10527-6	84	110	29	6	5
653	.836	10-R11026-6	86	111	27	6	5
2.0 " SP							
81	.089	8-R07025-3	78	96	82	3	4
91	.086	8-R07025-4	78	97	88	4	4
122	.112	8-R08013-3	79	98	68	3	4
154	.141	8-R08025-3	78	100	78	3	4
164	.130	8-R08013-4	79	99	71	4	4
206	.165	8-R08025-4	79	101	66	4	4
300	.251	9-R09026-4	80	102	52	4	4
326	.261	9-R09026-5	81	103	53	5	4
355	.362	9-R09626-4	80	104	44	4	4

CFM	BHP	MODEL	DBA @ 5'	CURVE NO.	% OF PEAK SP	INLET DIA.	OUTLET DIA.
2.0" SP *(continued)*							
384	.400	9-R10413-5	81	107	44	5	4
393	.391	9-R09626-5	82	105	46	5	4
427	.463	9-R10527-4	83	108	38	4	4
470	.505	9-R10527-5	83	109	37	5	4
578	.714	10-R10527-6	84	110	38	6	5
618	.785	10-R11026-6	85	111	36	6	5
691	.980	10-R11426-6	86	112	31	6	5
759	1.235	10-R12227-6	90	114	27	6	5
930	1.318	12-R11426-7	85	115	31	7	6
1045	1.672	12-R12227-7	89	116	28	7	6
1157	2.009	12-R13032-7	90	117	25	7	6
2.5 " SP							
67	.092	8-R08013-3	79	98	85	3	4
80	.097	8-R08013-4	79	99	89	4	4
114	.127	8-R08025-3	78	100	77	3	4
154	.141	8-R08025-4	79	101	83	4	4
270	.228	9-R09026-4	80	102	65	4	4
294	.243	9-R09026-5	82	103	67	5	4
331	.345	9-R09626-4	80	104	54	4	4
347	.375	9-R10413-5	81	107	55	5	4
357	.365	9-R09626-5	82	105	57	5	4
402	.440	9-R10527-4	81	108	47	4	4
440	.477	9-R10527-5	81	109	47	5	4
533	.669	10-R10527-6	83	110	48	6	5
582	.736	10-R11026-6	83	111	45	6	5
597	.982	10-R12213-6	84	113	38	6	5
660	.924	10-R11426-6	85	112	39	6	5
732	1.194	10-R12227-6	89	114	34	6	5
873	1.249	12-R11426-7	84	115	39	7	6
999	1.598	12-R12227-7	85	116	34	7	6
1109	1.927	12-R13032-7	88	117	31	7	6
1170	2.064	12-R14016-7	87	119	29	7	6
1254	2.220	12-R13722-7	88	118	29	7	6
1301	2.561	12-R14032-7	97	120	26	7	6

CFM	BHP	MODEL	DBA @ 5'	CURVE NO.	% OF PEAK SP	INLET DIA.	OUTLET DIA.
3.0 " SP							
45	.098	8-R08025-3	79	100	92	3	4
234	.203	9-R09026-4	80	102	78	4	4
251	.217	9-R09026-5	82	103	80	5	4
274	.332	9-R10413-4	80	106	62	4	4
301	.349	9-R10413-5	81	107	66	5	4
305	.325	9-R09626-4	80	104	65	4	4
323	.339	9-R09626-5	82	105	68	5	4
371	.414	9-R10527-4	82	108	56	4	4
410	.449	9-R10527-5	81	109	56	5	4
487	.604	10-R10527-6	83	110	58	6	5
546	.691	10-R11026-6	83	111	54	6	5
566	.951	10-R11213-6	84	113	45	6	5
628	.874	10-R11426-6	83	112	47	6	5
706	1.150	10-R12227-6	88	114	41	6	5
811	1.182	12-R11426-7	83	115	47	7	6
948	1.523	12-R12227-7	85	116	41	7	6
1061	1.843	12-R13032-7	87	117	38	7	6
1133	1.998	12-R14016-7	86	119	35	7	6
1207	2.132	12-R13722-7	87	118	34	7	6
1265	2.500	12-R14032-7	96	120	31	7	6
3.5 " SP							
164	.166	9-R09026-4	81	102	91	4	4
179	.175	9-R09026-5	81	103	93	5	4
227	.305	9-R10413-4	80	106	73	4	4
239	.317	9-R10413-5	81	107	77	5	4
268	.296	9-R09626-4	80	104	76	4	4
284	.310	9-R09626-5	81	105	80	5	4
340	.388	9-R10527-4	82	108	66	4	4
379	.420	9-R10527-5	81	109	65	5	4
443	.544	10-R10527-6	83	110	67	6	5
507	.651	10-R11026-6	82	111	63	6	5
529	.904	10-R12213-6	83	113	53	6	5
594	.828	10-R11426-6	83	112	55	6	5
678	1.105	10-R12227-6	88	114	48	6	5
753	1.116	12-R11426-7	83	115	54	7	6
889	1.448	12-R12227-7	84	116	48	7	6
1011	1.758	12-R13032-7	86	117	44	7	6
1090	1.926	12-R14016-7	86	119	41	7	6

Radial Wheels 3000 RPM 50 Hz

CFM	BHP	MODEL	DBA @ 5'	CURVE NO.	% OF PEAK SP	INLET DIA.	OUTLET DIA.
3.5" SP *(continued)*							
1158	2.032	12-R13722-7	87	118	40	7	6
1228	2.437	12-R14032-7	96	120	37	7	6
4.0 " SP							
152	.267	9-R10413-4	80	106	83	4	4
161	.272	9-R10413-5	81	107	88	5	4
205	.251	9-R09626-4	80	104	87	4	6
216	.262	9-R09626-5	81	105	91	5	4
311	.365	9-R10527-4	82	108	75	4	4
345	.391	9-R10527-5	81	109	75	5	4
409	.529	10-R10527-6	83	110	77	6	5
468	.621	10-R11026-6	82	111	71	6	5
486	.830	10-R12213-6	83	113	61	6	5
558	.788	10-R11426-6	82	112	62	6	5
647	1.059	10-R12227-6	87	114	54	6	5
700	1.052	12-R11426-7	82	115	62	7	6
831	1.371	12-R12227-7	83	116	55	7	6
960	1.672	12-R13032-7	85	117	50	7	6
1043	1.848	12-R14016-7	85	119	46	7	6
1105	1.935	12-R13722-7	86	118	46	7	6
1189	2.369	12-R14032-7	95	120	42	7	6
4.5 " SP							
26	.216	9-R10413-5	81	107	99	5	4
47	.223	9-R10413-4	80	106	94	4	4
271	.334	9-R10527-4	81	108	85	4	4
299	.353	9-R10527-5	84	109	81	5	4
361	.473	10-R10527-6	83	110	87	6	5
426	.579	10-R11026-6	82	111	80	6	5
428	.707	10-R12213-6	80	113	68	6	5
521	.763	10-R11426-6	82	112	70	6	5
613	1.011	10-R12227-6	84	114	61	6	5
642	.983	12-R11426-7	82	115	70	7	6
781	1.293	12-R12227-7	83	116	62	7	6
907	1.584	12-R13032-7	84	117	57	7	6
991	1.768	12-R14016-7	85	119	52	7	6
1049	1.839	12-R13722-7	82	118	52	7	6
1147	2.296	12-R14032-7	94	120	47	7	6
1444	2.746	15-R13446-7	85	121	47	7	8
1512	2.924	15-R13446-8	85	122	51	8	8
1531	2.965	15-R14032-7	85	124	47	7	8
1621	3.048	15-R13446-10	85	123	52	10	8
1655	3.255	15-R14032-8	86	125	49	8	8
1717	3.399	15-R14032-10	86	126	51	10	8
5.0 " SP							
195	.279	9-R10527-4	81	108	94	4	4
224	.299	9-R10527-5	81	109	93	5	4
262	.365	10-R10527-6	81	110	96	6	5
339	.643	10-R12213-6	80	113	76	6	5
374	.515	10-R11026-6	82	111	89	6	5
480	.734	10-R11426-6	82	112	78	6	5
575	.960	10-R12227-6	84	114	68	6	5
579	.913	12-R11426-7	82	115	78	7	6
728	1.212	12-R12227-7	82	116	69	7	6
848	1.492	12-R13032-7	84	117	63	7	6
935	1.684	12-R14016-7	84	119	52	7	6
988	1.746	12-R13722-7	85	118	57	7	6
1102	2.217	12-R14032-7	91	120	58	7	6
1357	2.592	15-R13446-7	84	121	54	7	8
1434	2.762	15-R13446-8	85	122	57	8	8
1450	2.810	15-R14032-7	85	124	53	7	8
1529	2.871	15-R13446-10	85	123	58	10	8
1566	3.069	15-R14032-8	85	125	54	8	8
1612	3.161	15-R14032-10	85	126	56	10	8
5.5 " SP							
231	.371	10-R11026-6	79	111	98	6	5
239	.516	10-R12213-6	82	113	83	6	5
433	.679	10-R11426-6	82	112	86	6	5
505	.832	12-R11426-7	82	115	86	7	6
531	.907	10-R12227-6	84	114	75	6	5
669	1.131	12-R12227-7	82	116	76	7	6
793	1.401	12-R13032-7	83	117	69	7	6
870	1.594	12-R14016-7	84	119	64	7	6

CFM	BHP	MODEL	DBA @ 5'	CURVE NO.	% OF PEAK SP	INLET DIA.	OUTLET DIA.
5.5" SP *(continued)*							
920	1.664	12-R13722-7	84	118	63	7	6
1054	2.129	12-R14032-7	91	120	58	7	6
1277	2.421	15-R13446-7	85	121	60	7	8
1360	2.590	15-R13446-8	84	122	62	8	8
1378	2.653	15-R14032-7	85	124	58	7	8
1433	2.685	15-R13446-10	85	123	63	10	8
1476	2.879	15-R14032-8	85	125	60	8	8
1504	2.909	15-R14032-10	85	126	62	10	8
1656	3.654	15-R15247-4-7	89	139	49	7	8
1761	3.762	15-R15247-4-8	91	140	51	8	8
1862	3.923	15-R15247-4-10	90	141	51	10	8
6.0 " SP							
356	.568	10-R11426-6	81	112	94	6	5
405	.724	12-R11426-7	82	115	93	7	6
490	.862	10-R12227-6	81	114	82	6	5
603	1.058	12-R12227-7	82	116	83	7	6
750	1.317	12-R13032-7	83	117	75	7	6
794	1.499	12-R14016-7	84	119	69	7	6
846	1.574	12-R13722-7	84	118	69	7	6
998	2.027	12-R14032-7	90	120	63	7	6
1193	2.241	15-R13446-7	85	121	65	7	8
1278	2.410	15-R13446-8	85	122	68	8	8
1301	2.491	15-R14032-7	86	124	63	7	8
1328	2.484	15-R13446-10	84	123	69	10	8
1380	2.683	15-R14032-8	85	125	65	8	8
1394	2.668	15-R14032-10	85	126	68	10	8
1486	3.591	15-R15134-7	87	127	52	7	8
1633	4.292	15-R16322-7	88	133	51	7	8
1704	4.277	15-R15134-8	88	128	52	8	8
1733	4.494	15-R15450-7	88	130	49	7	8
1764	4.653	15-R16322-8	88	134	52	8	8
1802	4.388	15-R15134-10	88	129	56	10	8
1852	4.754	15-R16322-10	89	135	53	10	8
1933	5.050	15-R15450-8	90	131	51	8	8
2096	5.046	15-R15450-10	91	132	51	10	8
6.5 " SP							
441	.805	10-R12227-6	80	114	88	6	5
522	.966	12-R12227-7	82	116	90	7	6
704	1.230	12-R13032-7	82	117	82	7	6
704	1.369	12-R14016-7	83	119	75	7	6
770	1.443	12-R13722-7	83	118	75	7	6
932	1.902	12-R14032-7	88	120	68	7	6
1098	2.055	15-R13446-7	86	121	71	7	8
1183	2.217	15-R13446-8	85	122	74	8	8
1211	2.248	15-R13446-10	84	123	75	10	8
1217	2.322	15-R14032-7	87	124	69	7	8
1276	2.475	15-R14032-8	85	125	70	8	8
1291	2.450	15-R14032-10	85	126	73	10	8
1409	3.367	15-R15134-7	87	127	56	7	8
1567	4.117	15-R16322-7	87	133	56	7	8
1619	3.985	15-R15134-8	88	128	57	8	8
1677	4.314	15-R15450-7	88	130	53	7	8
1710	4.469	15-R16322-8	88	134	57	8	8
1712	4.123	15-R15134-10	88	129	60	10	8
1791	4.574	15-R16322-10	88	135	58	10	8
1870	4.827	15-R15450-8	90	031	55	8	8
2014	4.875	15-R15450-10	90	132	55	10	8
7.0 " SP							
348	.647	10-R12227-6	83	114	95	6	5
405	.830	12-R12227-7	82	116	96	7	6
639	1.139	12-R13032-7	82	117	88	7	6
680	1.309	12-R13722-7	83	118	80	7	6
875	1.794	12-R14032-7	86	120	73	7	6
973	1.863	15-R13446-7	87	121	76	7	8
1042	1.992	15-R13446-8	85	122	79	8	8
1077	1.993	15-R13446-10	84	123	81	10	8

CFM	BHP	MODEL	DBA @ 5'	CURVE NO.	% OF PEAK SP	INLET DIA.	OUTLET DIA.
7.0" SP *(continued)*							
1160	2.257	15-R14032-8	85	125	76	8	8
1182	2.237	15-R14032-10	85	126	79	10	8
1188	2.157	15-R14032-7	87	124	74	7	8
1328	3.143	15-R15134-7	87	127	60	7	8
1500	3.932	15-R16322-7	86	133	60	7	8
1528	3.693	15-R15134-8	88	128	61	8	8
1616	3.850	15-R15134-10	88	129	65	10	8
1618	4.133	15-R15450-7	87	130	57	7	8
1647	4.274	15-R16322-8	87	134	61	8	8
1705	4.347	15-R16322-10	88	135	62	10	8
1802	4.599	15-R15450-8	90	131	59	8	8
1861	5.149	15-R16550-7	89	136	52	7	8
1927	4.693	15-R15450-10	89	132	59	10	8
2104	5.785	15-R16550-8	90	137	52	8	8
2278	5.989	15-R16550-10	92	138	52	10	8
7.5 " SP							
465	1.028	12-R14016-7	83	119	87	7	6
539	1.023	12-R13032-7	82	117	94	7	6
572	1.164	12-R13722-7	82	118	86	7	6
825	1.697	12-R14032-7	85	120	79	7	6
832	1.647	15-R13446-7	88	121	82	7	8
886	1.735	15-R13446-8	85	122	85	8	8
915	1.725	15-R13446-10	84	123	86	10	8
1006	1.969	15-R14032-7	88	124	79	7	8
1032	2.024	15-R14032-8	85	125	81	8	8
1060	2.025	15-R14032-10	85	126	84	10	8
1247	2.930	15-R15134-7	87	127	65	7	8
1430	3.737	15-R16322-7	86	133	64	7	8
1431	3.403	15-R15134-8	87	128	65	8	8
1511	3.569	15-R15134-10	88	129	70	10	8
1554	3.951	15-R15450-7	87	130	61	7	8
1570	4.062	15-R16322-8	88	134	65	8	8
1579	4.046	15-R16322-10	88	135	66	10	8
1727	4.363	15-R15450-8	89	131	64	8	8
1816	5.045	15-R16550-7	89	136	55	7	8
1834	4.496	15-R15450-10	89	132	63	10	8
2046	5.565	15-R16550-8	90	137	56	8	8
2189	5.787	15-R16550-10	92	138	56	10	8
8.0 " SP							
331	.849	12-R14016-7	82	119	93	7	6
462	.997	12-R13722-7	82	118	92	7	6
678	1.403	15-R13446-7	86	121	87	7	8
694	1.427	15-R13446-10	84	123	92	10	8
713	1.428	15-R13446-8	83	122	91	8	8
768	1.591	12-R14032-7	84	120	84	7	6
872	1.744	15-R14032-7	89	124	84	7	8
892	1.784	15-R14032-8	84	125	87	8	8
920	1.833	15-R14032-10	85	126	90	10	8
1165	2.726	15-R15134-7	87	127	69	7	8
1323	3.133	15-R15134-8	87	128	70	8	8
1353	3.526	15-R16322-7	87	133	68	7	8
1379	3.249	15-R15134-10	88	129	74	10	8
1449	3.736	15-R16322-10	87	135	71	10	8
1483	3.834	15-R16322-8	89	134	70	8	8
1486	3.770	15-R15450-7	86	130	65	7	8
1637	4.110	15-R15450-8	89	131	68	8	8
1732	4.274	15-R15450-10	89	132	68	10	8
1768	4.942	15-R16550-7	89	136	59	7	8
1946	5.355	15-R16550-8	89	137	59	8	8
2098	5.600	15-R16550-10	91	138	59	10	8
8.5 " SP							
210	.673	12-R13722-7	82	118	98	7	6
390	1.079	15-R13446-10	81	123	98	10	8
444	1.025	15-R13446-7	83	121	92	7	8
474	1.063	15-R13446-8	82	122	96	8	8
691	1.474	12-R14032-7	85	120	89	7	6
692	1.438	15-R14032-7	86	124	90	7	8
722	1.508	15-R14032-8	82	125	92	8	8
742	1.631	15-R14032-10	85	126	96	10	8
1072	2.507	15-R15134-7	87	127	73	7	8
1204	2.857	15-R15134-8	87	128	74	8	8
1237	2.928	15-R15134-10	88	129	79	10	8

Radial Wheels 3000 RPM 50 Hz

CFM	BHP	MODEL	DBA @ 5'	CURVE NO.	% OF PEAK SP	INLET DIA.	OUTLET DIA.
8.5" SP *(continued)*							
1264	3.293	15-R16322-7	86	133	73	7	8
1322	3.426	15-R16322-10	87	135	75	10	8
1383	3.579	15-R16322-8	89	134	74	8	8
1411	3.582	15-R15450-7	86	130	69	7	8
1540	3.850	15-R15450-8	89	131	72	8	8
1625	4.038	15-R15450-10	89	132	72	10	8
1717	4.829	15-R16550-7	88	136	63	7	8
1854	5.152	15-R16550-8	89	137	63	8	8
2008	5.414	15-R16550-10	90	138	63	10	8
9.0 " SP							
962	2.266	15-R15134-7	87	127	78	7	8
1070	2.563	15-R15134-8	86	128	78	8	8
1087	2.614	15-R15134-10	88	129	84	10	8
1135	2.965	15-R16322-7	86	133	77	7	8
1183	3.099	15-R16322-10	87	135	80	10	8
1221	3.201	15-R16322-8	90	134	79	8	8
1328	3.383	15-R15450-7	86	130	73	7	8
1435	3.582	15-R15450-8	89	131	76	8	8
1510	3.789	15-R15450-10	89	132	76	10	8
1662	4.703	15-R16550-7	88	136	66	7	8
1772	4.960	15-R16550-8	88	137	67	8	8
1923	5.241	15-R16550-10	90	138	67	10	8
9.5 " SP							
787	1.932	15-R15134-7	86	127	82	7	8

CFM	BHP	MODEL	DBA @ 5'	CURVE NO.	% OF PEAK SP	INLET DIA.	OUTLET DIA.
9.5" SP *(continued)*							
903	2.228	15-R15134-8	86	128	83	8	8
938	2.340	15-R15134-10	87	129	88	10	8
982	2.606	15-R16322-7	86	133	81	7	8
1021	2.742	15-R16322-10	87	135	84	10	8
1030	2.782	15-R16322-8	91	134	83	8	8
1222	3.168	15-R15450-7	86	130	77	7	8
1316	3.307	15-R15450-8	89	131	81	8	8
1392	3.529	15-R15450-10	90	132	80	10	8
1600	4.557	15-R16550-7	88	136	70	7	8
1704	4.786	15-R16550-8	88	137	70	8	8
1839	5.070	15-R16550-10	89	138	70	10	8
10.0 " SP							
603	1.599	15-R15134-7	85	127	86	7	8
707	1.865	15-R15134-8	85	128	87	8	8
759	2.035	15-R15134-10	85	129	93	10	8
771	2.196	15-R16322-7	86	133	85	7	8
788	2.311	15-R16322-8	89	134	87	8	8
799	2.288	15-R16322-10	86	135	89	10	8
1094	2.913	15-R15450-7	85	130	81	7	8
1185	3.014	15-R15450-8	89	131	87	8	8

CFM	BHP	MODEL	DBA @ 5'	CURVE NO.	% OF PEAK SP	INLET DIA.	OUTLET DIA.
10.0" SP *(continued)*							
1261	3.244	15-R15450-10	90	132	85	10	8
1525	4.357	15-R16550-7	88	136	74	7	8
1630	4.602	15-R16550-8	87	137	74	8	8
1750	4.884	15-R16550-10	88	138	74	10	8
11.0 " SP							
259	1.150	15-R15134-8	82	128	96	8	8
279	1.080	15-R15134-7	83	127	95	7	8
338	1.324	15-R16322-7	84	133	94	7	8
376	1.641	15-R16322-10	83	135	97	10	8
379	1.476	15-R16322-8	84	134	96	8	8
818	2.331	15-R15450-7	84	130	89	7	8
892	2.370	15-R15450-8	87	131	93	8	8
938	2.528	15-R15450-10	89	132	93	10	8
1355	3.925	15-R16550-7	87	136	81	7	8
1461	4.191	15-R16550-8	86	137	82	8	8
1551	4.438	15-R16550-10	87	138	81	10	8
12.0 " SP							
1143	3.445	15-R16550-7	87	136	88	7	8
1221	3.662	15-R16550-8	90	137	89	8	8
1307	3.857	15-R16550-10	87	138	89	10	8
13.0 " SP							
818	2.656	15-R16550-7	91	136	96	7	8
909	2.893	15-R16550-8	91	137	96	8	8
979	3.082	15-R16550-10	87	138	96	10	8

Backward Curve 3000 RPM 50 Hz

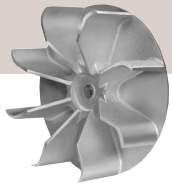

CFM	BHP	MODEL	DBA @ 5'	CURVE NO.	% OF PEAK SP	INLET DIA.	OUTLET DIA.
.5 " SP							
162	.102	8-B07025-3	80	167	21	3	4
190	.132	8-B08125-3	80	169	16	3	4
198	.101	8-B07025-4	79	168	23	4	4
251	.168	8-B08125-4	79	170	17	4	4
1.0 " SP							
137	.097	8-B07025-3	80	167	43	3	4
168	.095	8-B07025-4	79	168	47	4	4
170	.129	8-B08125-3	80	169	32	3	4
223	.159	8-B08125-4	79	170	35	4	4
309	.181	9-B08725-4	80	171	27	4	4
321	.185	9-B08725-5	80	172	28	5	4
376	.283	9-B10127-4	81	173	21	4	4
414	.300	9-B10127-5	81	174	22	5	4
479	.486	10-B10127-6	79	175	23	6	5
1.5 " SP							
100	.089	8-B07025-3	79	167	64	3	4
122	.084	8-B07025-4	79	168	70	4	4
151	.124	8-B08125-3	80	169	48	3	4
191	.146	8-B08125-4	79	170	52	4	4
280	.170	9-B08725-4	80	171	40	4	4
292	.174	9-B08725-5	80	172	42	5	4
347	.267	9-B10127-4	82	173	31	4	4
384	.286	9-B10127-5	81	174	33	5	4
444	.467	10-B10127-6	79	175	35	6	5
541	.641	10-B10727-6	81	176	29	6	5
924	1.289	12-B13031-7	86	177	20	7	6

CFM	BHP	MODEL	DBA @ 5'	CURVE NO.	% OF PEAK SP	INLET DIA.	OUTLET DIA.
2.0" SP							
49	.073	8-B07025-3	80	167	86	3	4
49	.069	8-B07025-4	79	168	94	4	4
116	.114	8-B08125-3	80	169	64	3	4
152	.131	8-B08125-4	79	170	70	4	4
250	.158	9-B08725-4	80	171	53	4	4
261	.160	9-B08725-5	80	172	56	5	4
317	.249	9-B10127-4	81	173	42	4	4
353	.272	9-B10127-5	81	174	45	5	4
410	.456	10-B10127-6	79	175	47	6	5
510	.621	10-B10727-6	80	176	39	6	5
882	1.244	12-B13031-7	86	177	27	7	6
2.5" SP							
74	.101	8-B08125-3	80	169	80	3	4
91	.109	8-B08125-4	79	170	87	4	4
216	.143	9-B08725-4	80	171	67	4	4
225	.146	9-B08725-5	80	172	70	5	4
282	.229	9-B10127-4	81	173	52	4	4
312	.252	9-B10127-5	81	174	56	5	4
368	.432	10-B10127-6	78	175	58	6	5
475	.597	10-B10727-6	80	176	49	6	5
839	1.198	12-B13031-7	85	177	34	7	6
1001	1.595	12-B14132-7	88	178	29	7	6

CFM	BHP	MODEL	DBA @ 5'	CURVE NO.	% OF PEAK SP	INLET DIA.	OUTLET DIA.
3.0" SP							
20	.087	8-B08125-3	80	169	96	3	4
157	.117	8-B08725-4	80	171	80	4	4
165	.120	9-B08725-5	80	172	84	5	4
252	.211	9-B10127-4	81	173	63	4	4
279	.226	9-B10127-5	81	174	67	5	4
311	.381	10-B10127-6	79	175	70	6	5
436	.567	10-B10727-6	79	176	58	6	5
798	1.153	12-B13031-7	84	177	41	7	6
964	1.557	12-B14132-7	87	178	34	7	6
3.5" SP							
57	.081	9-B08725-5	81	172	98	5	4
157	.117	9-B08725-4	80	171	94	4	4
209	.184	9-B10127-4	81	173	73	4	4
242	.200	9-B10127-5	81	174	78	5	4
269	.343	10-B10127-6	79	175	82	6	5
390	.526	10-B10727-6	79	176	68	6	5
758	1.109	12-B13031-7	84	177	48	7	6
927	1.517	12-B14132-7	86	178	40	7	6
4.0" SP							
149	.151	9-B10127-4	81	173	84	4	4
163	.170	9-B10127-5	81	174	89	5	4
192	.282	10-B10127-6	79	175	93	6	5
350	.495	10-B10727-6	79	176	78	6	5
719	1.066	12-B13031-7	83	177	54	7	6
890	1.475	12-B14132-7	85	178	46	7	6

Backward Curve 3000 RPM 50 Hz

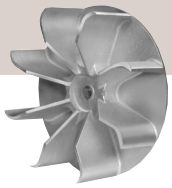

CFM	BHP	MODEL	DBA @ 5'	CURVE NO.	% OF PEAK SP	INLET DIA.	OUTLET DIA.
4.5" SP							
56	.119	9-B10127-4	81	173	94	4	4
296	.435	10-B10727-6	79	176	88	6	5
682	1.025	12-B13031-7	83	177	61	7	6
851	1.429	12-B14132-7	85	178	52	7	6
1103	1.610	15-B14132-7	82	179	48	7	8
1124	1.655	15-B14132-10	83	181	54	10	8
1134	1.648	15-B14132-8	83	180	50	8	8
5.0" SP							
181	.343	10-B10727-6	79	176	97	6	5
647	.985	12-B13031-7	83	177	68	7	6
812	1.380	12-B14132-7	84	178	57	7	6
1035	1.568	15-B14132-10	83	181	60	10	8
1037	1.540	15-B14132-7	82	179	54	7	8
1055	1.557	15-B14132-8	82	180	56	8	8
1356	2.563	15-B15247-7	85	182	47	7	8
1429	2.755	15-B15247-8	86	183	48	8	8
1515	2.782	15-B15247-10	86	184	51	10	8
5.5" SP							
647	.985	12-B13031-7	83	177	75	7	6
812	1.380	12-B14132-7	84	178	63	7	6
960	1.497	15-B14132-10	82	181	66	10	8
967	1.465	15-B14132-7	81	179	59	7	8
973	1.475	15-B14132-8	82	180	62	8	8
1301	2.461	15-B15247-7	84	182	51	7	8
1361	2.632	15-B15247-8	85	183	53	8	8
1431	2.662	15-B15247-10	85	184	56	10	8
6.0" SP							
549	.879	12-B13031-7	83	177	82	7	6
734	1.277	12-B14132-7	84	178	69	7	6
886	1.429	15-B14132-10	81	181	72	10	8
888	1.380	15-B14132-7	81	179	64	7	8
890	1.411	15-B14132-8	81	180	67	8	8
1241	2.347	15-B15247-7	84	182	56	7	8
1298	2.489	15-B15247-8	84	183	58	8	8
1354	2.544	15-B15247-10	84	184	61	10	8
6.5" SP							
466	.791	12-B13031-7	88	177	88	7	6
690	1.214	12-B14132-7	83	178	75	7	6
799	1.353	15-B14132-10	81	181	78	10	8
801	1.285	15-B14132-7	81	179	70	7	8
801	1.330	15-B14132-8	81	180	73	8	8
1166	2.194	15-B15247-7	83	182	61	7	8
1232	2.339	15-B15247-8	83	183	63	8	8
1271	2.412	15-B15247-10	84	184	66	10	8

CFM	BHP	MODEL	DBA @ 5'	CURVE NO.	% OF PEAK SP	INLET DIA.	OUTLET DIA.
6.5" SP *(continued)*							
1590	3.914	15-B16550-7	89	188	48	7	8
1764	4.271	15-B16550-8	89	189	50	8	8
1847	4.361	15-B16550-10	88	190	51	10	8
7.0" SP							
349	.674	12-B13031-7	83	177	95	7	6
638	1.120	12-B14132-7	83	178	80	7	6
687	1.264	15-B14132-10	81	181	84	10	8
701	1.178	15-B14132-7	81	179	75	7	8
701	1.228	15-B14132-8	81	180	79	8	8
1086	2.027	15-B15247-7	83	182	65	7	8
1158	2.181	15-B15247-8	83	183	68	8	8
1178	2.259	15-B15247-10	83	184	71	10	8
1547	3.813	15-B16550-7	89	188	52	7	8
1704	4.151	15-B16550-8	88	189	53	8	8
1784	4.228	15-B16550-10	88	190	55	10	8
7.5" SP							
526	1.147	15-B14132-10	80	181	90	10	8
575	1.022	12-B14132-7	83	178	86	7	6
575	1.044	15-B14132-7	81	179	80	7	8
590	1.092	15-B14132-8	80	180	84	8	8
994	1.856	15-B15247-7	82	182	70	7	8
1066	2.008	15-B15247-8	82	183	73	8	8
1070	2.057	15-B15247-10	82	184	76	10	8
1502	3.705	15-B16550-7	89	188	56	7	8
1642	4.023	15-B16550-8	88	189	57	8	8
1720	4.098	15-B16550-10	87	190	59	10	8
8.0" SP							
300	.973	15-B14132-10	80	181	96	10	8
429	.875	15-B14132-7	81	179	86	7	8
436	.906	15-B14132-8	80	180	90	8	8
483	.916	12-B14132-7	83	178	92	7	6
882	1.681	15-B15247-7	82	182	75	7	8
940	1.806	15-B15247-8	82	183	78	8	8
946	1.846	15-B15247-10	82	184	82	10	8
1452	3.588	15-B16550-7	90	188	59	7	8
1580	3.880	15-B16550-8	88	189	61	8	8
1652	3.971	15-B16550-10	87	190	63	10	8

CFM	BHP	MODEL	DBA @ 5'	CURVE NO.	% OF PEAK SP	INLET DIA.	OUTLET DIA.
8.5" SP							
240	.699	15-B14132-8	80	180	95	8	8
277	.697	15-B14132-7	80	179	91	7	8
346	.763	12-B14132-7	83	178	98	7	6
757	1.495	15-B15247-7	82	182	79	7	8
788	1.596	15-B15247-10	82	184	87	10	8
799	1.592	15-B15247-8	82	183	82	8	8
1396	3.440	15-B16550-7	90	188	63	7	8
1516	3.728	15-B16550-8	87	189	65	8	8
1580	3.835	15-B16550-10	86	190	67	10	8
9.0" SP							
152	.587	15-B14132-7	80	179	97	7	8
588	1.332	15-B15247-10	81	184	92	10	8
610	1.293	15-B15247-7	82	182	84	7	8
629	1.357	15-B15247-8	81	183	87	8	8
1335	3.285	15-B16550-7	90	188	67	7	8
1446	3.567	15-B16550-8	87	189	69	8	8
1502	3.687	15-B16550-10	86	190	71	10	8
9.5" SP							
392	1.170	15-B15247-10	81	184	97	10	8
448	1.099	15-B15247-8	81	183	92	8	8
449	1.067	15-B15247-7	82	182	89	7	8
1268	3.123	15-B16550-7	91	188	71	7	8
1370	3.394	15-B16550-8	86	189	72	8	8
1416	3.522	15-B16550-10	85	190	75	10	8
10.0" SP							
243	.821	15-B15247-8	81	183	97	8	8
288	.845	15-B15247-7	82	182	93	7	8
1193	2.952	15-B16550-7	91	188	74	7	8
1275	3.188	15-B16550-8	86	189	76	8	8
1314	3.321	15-B16550-10	85	190	79	10	8
11.0" SP							
975	2.539	15-B16550-7	88	188	82	7	8
1041	2.701	15-B16550-8	88	189	84	8	8
1078	2.858	15-B16550-10	84	190	87	10	8
12.0" SP							
702	2.021	15-B16550-7	88	188	89	7	8
746	2.139	15-B16550-8	87	189	92	8	8
770	2.240	15-B16550-10	84	190	95	10	8
13.0" SP							
199	1.129	15-B16550-8	84	189	99	8	8
307	1.290	15-B16550-7	87	188	96	7	8

Forward Curve 3000 RPM 50 Hz

CFM	BHP	MODEL	DBA @ 5'	CURVE NO.	% OF PEAK SP	INLET DIA.	OUTLET DIA.
.5" SP							
321	.244	8-F07620-3	78	142	14	3	4
504	.522	8-F07620-4	79	143	14	4	4
1.0" SP							
301	.237	8-F07620-3	78	142	29	3	4
474	.493	8-F07620-4	78	143	29	4	4
651	1.125	9-F10020-4	83	144	17	4	4
766	1.365	9-F10020-5	83	145	17	5	4

CFM	BHP	MODEL	DBA @ 5'	CURVE NO.	% OF PEAK SP	INLET DIA.	OUTLET DIA.
1.5" SP							
276	.227	8-F07620-3	77	142	43	3	4
439	.454	8-F07620-4	77	143	43	4	4

CFM	BHP	MODEL	DBA @ 5'	CURVE NO.	% OF PEAK SP	INLET DIA.	OUTLET DIA.
1.5" SP *(continued)*							
630	1.072	9-F10020-4	83	144	25	4	4
739	1.316	9-F10020-5	83	145	25	5	4
1042	2.413	10-F10020-6	85	146	24	6	5
1078	2.613	10-F10520-6	86	147	21	6	5
2.0" SP							
246	.213	8-F07620-3	79	142	58	3	4
397	.406	8-F07620-4	77	143	58	4	4

Forward Curve 3000 RPM 50 Hz

CFM	BHP	MODEL	DBA @ 5'	CURVE NO.	% OF PEAK SP	INLET DIA.	OUTLET DIA.
2.0" SP *(continued)*							
606	1.020	9-F10020-4	82	144	34	4	4
712	1.262	9-F10020-5	82	145	33	5	4
1008	2.303	10-F10020-6	85	146	32	6	5
1047	2.529	10-F10520-6	85	147	29	6	5
1880	5.823	12-F12220-7	89	148	21	7	6
2.5" SP							
207	.191	8-F07620-3	78	142	72	3	4
350	.353	8-F07620-4	77	143	72	4	4
579	.970	9-F10020-4	82	144	42	4	4
684	1.201	9-F10020-5	82	145	42	5	4
973	2.188	10-F10020-6	85	146	40	6	5
1015	2.439	10-F10520-6	85	147	36	6	5
1838	5.698	12-F12220-7	89	148	26	7	6
1949	6.042	12-F12224-7	90	149	24	7	6
2006	6.934	12-F13420-7	91	150	22	7	6
2117	7.390	12-F13430-7	92	151	21	7	6
3.0" SP							
146	.148	8-F07620-3	79	142	87	3	4
299	.296	8-F07620-4	79	143	87	4	4
548	.921	9-F10020-4	81	144	50	4	4
655	1.137	9-F10020-5	82	145	50	5	4
938	2.067	10-F10020-6	84	146	48	6	5
984	2.341	10-F10520-6	85	147	43	6	5
1795	5.566	12-F12220-7	88	148	31	7	6
1912	5.908	12-F12224-7	90	149	29	7	6
1972	6.819	12-F13420-7	91	150	26	7	6
2072	7.212	12-F13430-7	92	151	25	7	6
3.5" SP							
514	.878	9-F10020-4	81	144	59	4	4
622	1.071	9-F10020-5	82	145	58	5	4
907	1.931	10-F10020-6	84	146	55	6	5
958	2.233	10-F10520-6	85	147	50	6	5
1751	5.427	12-F12220-7	88	148	36	7	6
1874	5.769	12-F12224-7	90	149	34	7	6
1938	6.702	12-F13420-7	91	150	31	7	6
2028	7.035	12-F13430-7	92	151	29	7	6
4.0" SP							
477	.828	9-F10020-4	80	144	67	4	4
586	1.001	9-F10020-5	82	145	67	5	4
872	1.795	10-F10020-6	83	146	63	6	5
930	2.121	10-F10520-6	84	147	57	6	5
1706	5.279	12-F12220-7	87	148	41	7	6
1834	5.625	12-F12224-7	89	149	39	7	6
1903	6.583	12-F13420-7	90	150	35	7	6
1984	6.861	12-F13430-7	91	151	33	7	6
4.5" SP							
441	.750	9-F10020-4	80	144	76	4	4
547	.925	9-F10020-5	82	145	75	5	4
835	1.656	10-F10020-6	83	146	71	6	5
900	2.005	10-F10520-6	84	147	64	6	5
1660	5.117	12-F12220-7	87	148	46	7	6
1793	5.476	12-F12224-7	89	149	44	7	6
1868	6.462	12-F13420-7	90	150	39	7	6
1950	6.728	12-F13430-7	91	151	38	7	6
5.0" SP							
399	.654	9-F10020-4	81	144	84	4	4
507	.846	9-F10020-5	81	145	84	5	4
791	1.514	10-F10020-6	83	146	79	6	5
866	1.883	10-F10520-6	84	147	71	6	5
1614	4.948	12-F12220-7	87	148	52	7	6
1750	5.312	12-F12224-7	88	149	49	7	6
1832	6.339	12-F13420-7	90	150	44	7	6
1915	6.591	12-F13430-7	91	151	42	7	6
5.5" SP							
117	.194	9-F10020-5	81	145	92	5	4
324	.535	9-F10020-4	81	144	93	4	4
739	1.367	10-F10020-6	82	146	87	6	5
828	1.753	10-F10520-6	83	147	78	6	5
1565	4.773	12-F12220-7	87	148	57	7	6

CFM	BHP	MODEL	DBA @ 5'	CURVE NO.	% OF PEAK SP	INLET DIA.	OUTLET DIA.
5.5" SP *(continued)*							
1704	5.142	12-F12224-7	88	149	53	7	6
1801	6.242	12-F13420-7	90	150	48	7	6
1879	6.448	12-F13430-7	91	151	46	7	6
6.0" SP							
668	1.218	10-F10020-6	82	146	95	6	5
780	1.610	10-F10520-6	83	147	86	6	5
1515	4.591	12-F12220-7	86	148	62	7	6
1657	4.965	12-F12224-7	87	149	58	7	6
1770	6.146	12-F13420-7	90	150	52	7	6
1842	6.300	12-F13430-7	90	151	50	7	6
6.5" SP							
710	1.427	10-F10520-6	81	147	93	6	5
1463	4.401	12-F12220-7	86	148	67	7	6
1606	4.780	12-F12224-7	87	149	63	7	6
1738	6.043	12-F13420-7	90	150	57	7	6
1802	6.146	12-F13430-7	90	151	54	7	6
2924	13.117	15-F15020-7	93	152	52	7	8
3253	14.114	15-F15020-8	93	153	51	8	8
7.0" SP							
566	1.164	10-F10520-6	82	147	100	6	5
1409	4.202	12-F12220-7	86	148	72	7	6
1553	4.586	12-F12224-7	86	149	68	7	6
1704	5.932	12-F13420-7	89	150	61	7	6
1762	5.985	12-F13430-7	90	151	58	7	6
2802	10.910	15-F15020-10	90	154	57	10	8
2870	12.850	15-F15020-7	93	152	56	7	8
2984	15.323	15-F16420-7	95	161	50	7	8
3185	13.820	15-F15020-8	93	153	55	8	8
3229	13.701	15-F15040-7	99	158	51	7	8
7.5" SP							
1353	3.992	12-F12220-7	85	148	77	7	6
1495	4.380	12-F12224-7	86	149	73	7	6
1668	5.811	12-F13420-7	89	150	65	7	6
1719	5.816	12-F13430-7	89	151	63	7	6
2738	10.729	15-F15020-10	90	154	61	10	8
2813	12.575	15-F15020-7	93	152	60	7	8
3102	13.061	15-F15030-7	94	155	53	7	8
3114	13.517	15-F15020-8	92	153	59	8	8
3160	13.380	15-F15040-7	99	158	55	7	8
3245	15.289	15-F16420-10	92	163	52	10	8
3376	17.001	15-F16420-8	94	162	52	8	8
3425	15.049	15-F15030-10	92	157	52	10	8
3617	16.341	15-F15030-8	94	156	51	8	8
3754	16.956	15-F15040-8	100	159	51	8	8
8.0" SP							
1298	3.777	12-F12220-7	82	148	83	7	6
1432	4.161	12-F12224-7	86	149	78	7	6
1674	5.637	12-F13430-7	89	151	67	7	6
2659	10.526	15-F15020-10	90	154	65	10	8
2753	12.288	15-F15020-7	92	152	64	7	8
2879	14.823	15-F16420-7	95	161	58	7	8
3037	12.726	15-F15030-7	93	155	57	7	8
3040	13.205	15-F15020-8	92	153	63	8	8
3087	13.058	15-F15040-7	99	158	59	7	8
3151	15.922	15-F16440-7	98	164	51	7	8
3191	15.099	15-F16420-10	92	163	55	10	8
3337	16.750	15-F16420-8	93	162	56	8	8
3376	14.755	15-F15030-10	91	157	55	10	8
3543	15.986	15-F15030-8	94	156	54	8	8
3667	16.483	15-F15040-8	100	159	54	8	8
4045	19.143	15-F15040-10	98	160	51	10	8
8.5" SP							
1238	3.546	12-F12220-7	82	148	88	7	6
1363	3.925	12-F12224-7	81	149	78	7	6

CFM	BHP	MODEL	DBA @ 5'	CURVE NO.	% OF PEAK SP	INLET DIA.	OUTLET DIA.
8.5" SP *(continued)*							
1588	5.531	12-F13420-7	89	150	74	7	6
1626	5.447	12-F13430-7	89	151	71	7	6
2573	10.298	15-F15020-10	90	154	70	10	8
2690	11.987	15-F15020-7	92	152	68	7	8
2823	14.559	15-F16420-7	94	161	61	7	8
2963	12.881	15-F15020-8	92	153	67	8	8
2969	12.383	15-F15030-7	93	155	61	7	8
3011	12.729	15-F15040-7	98	158	62	7	8
3086	15.607	15-F16440-7	98	164	54	7	8
3132	14.898	15-F16420-10	92	163	59	10	8
3292	16.490	15-F16420-8	93	162	59	8	8
3323	14.458	15-F15030-10	91	157	59	10	8
3466	15.613	15-F15030-8	94	156	57	8	8
3578	16.006	15-F15040-8	100	159	57	8	8
3592	18.448	15-F16440-8	100	165	51	8	8
3963	18.646	15-F16040-10	98	160	55	10	8
9.0" SP							
1160	3.282	12-F12220-7	83	148	93	7	6
1363	3.925	12-F12224-7	81	149	87	7	6
1541	5.365	12-F13420-7	89	150	78	7	6
1575	5.243	12-F13430-7	88	151	75	7	6
2481	10.040	15-F15020-10	89	154	74	10	8
2623	11.669	15-F15020-7	92	152	72	7	8
2764	14.285	15-F16420-7	94	161	65	7	8
2883	12.556	15-F15020-8	92	153	71	8	8
2896	12.027	15-F15030-7	93	155	64	7	8
2929	12.392	15-F15040-7	98	158	66	7	8
3020	15.341	15-F16440-7	98	164	57	7	8
3059	14.674	15-F16420-10	92	163	62	10	8
3223	16.200	15-F16420-8	93	162	63	8	8
3265	14.160	15-F15030-10	91	157	62	10	8
3387	15.209	15-F15030-8	94	156	61	8	8
3489	15.544	15-F15040-8	99	159	61	8	8
3530	18.163	15-F16440-8	100	165	54	8	8
3879	18.143	15-F15040-10	98	160	58	10	8
4028	21.215	15-F16440-10	99	166	50	10	8
9.5" SP							
1024	2.874	12-F12220-7	83	148	98	7	6
1192	3.340	12-F12224-7	82	149	92	7	6
1489	5.171	12-F13420-7	89	150	83	7	6
1519	5.014	12-F13430-7	88	151	79	7	6
2384	9.747	15-F15020-10	89	154	78	10	8
2552	11.326	15-F15020-7	92	152	76	7	8
2702	13.999	15-F16420-7	94	161	68	7	8
2797	12.218	15-F15020-8	91	153	75	8	8
2817	11.648	15-F15030-7	92	155	68	7	8
2838	12.055	15-F15040-7	96	158	70	7	8
2953	15.111	15-F16440-7	98	164	61	7	8
2976	14.424	15-F16420-10	92	163	66	10	8
3151	15.898	15-F16420-8	93	162	66	8	8
3178	13.900	15-F15030-10	91	157	65	10	8
3305	14.780	15-F15030-8	93	156	67	8	8
3397	15.073	15-F15040-8	99	159	64	8	8
3465	17.868	15-F16440-8	100	165	57	8	8
3793	17.634	15-F15040-10	98	160	61	10	8
3949	20.773	15-F16440-10	99	166	53	10	8
10.0" SP							
1070	2.934	12-F12224-7	82	149	97	7	6
1459	4.764	12-F13430-7	88	151	83	7	6
2282	9.409	15-F15020-10	89	154	82	10	8
2476	10.959	15-F15020-7	91	152	80	7	8
2638	13.700	15-F16420-7	94	161	72	7	8
2706	11.851	15-F15020-8	91	153	79	8	8
2735	11.279	15-F15030-7	92	155	71	7	8
2737	11.710	15-F15040-7	96	158	73	7	8
2883	14.857	15-F16440-7	97	164	64	7	8
2889	14.152	15-F16420-10	92	163	69	10	8
3076	15.584	15-F16420-8	93	162	70	8	8
3089	13.603	15-F15030-10	90	157	69	10	8
3218	14.335	15-F15030-8	93	156	67	8	8
3301	14.586	15-F15040-8	97	159	67	8	8
3399	17.560	15-F16440-8	99	165	60	8	8

Forward Curve 3000 RPM 50 Hz

CFM	BHP	MODEL	DBA @ 5'	CURVE NO.	% OF PEAK SP	INLET DIA.	OUTLET DIA.
10.0" SP *(continued)*							
3706	17.119	15-F15040-10	97	160	64	10	8
3867	20.326	15-F16440-10	98	166	56	10	8
11.0" SP							
1229	4.129	12-F13420-7	83	150	96	7	6
1311	4.244	12-F13430-7	83	151	92	7	6
2038	8.547	15-F15020-10	86	154	90	10	8
2300	10.131	15-F15020-7	85	152	80	7	8
2496	13.049	15-F16420-7	93	161	79	7	8
2500	10.994	15-F15020-8	86	153	87	8	8
2527	10.928	15-F15040-7	96	158	81	7	8
2555	10.484	15-F15030-7	91	155	78	7	8
2703	13.530	15-F16420-10	91	163	76	10	8
2735	14.264	15-F16440-7	97	164	70	7	8
2904	12.888	15-F15030-10	90	157	76	10	8
3028	13.386	15-F15030-8	92	156	74	8	8
3091	13.553	15-F15040-8	96	159	74	8	8
3258	16.902	15-F16440-8	97	165	66	8	8
3528	16.075	15-F15040-10	97	160	71	10	8
3695	19.388	15-F16440-10	98	166	62	10	8
12.0" SP							
2064	9.096	15-F15020-7	86	152	96	7	8
2241	9.875	15-F15020-8	87	153	95	8	8
2307	9.934	15-F15040-7	95	158	88	7	8
2330	12.297	15-F16420-7	92	161	86	7	8

CFM	BHP	MODEL	DBA @ 5'	CURVE NO.	% OF PEAK SP	INLET DIA.	OUTLET DIA.
12.0" SP *(continued)*							
2350	9.681	15-F15030-7	90	155	86	7	8
2578	13.485	15-F16440-7	97	164	77	7	8
2703	12.793	15-F16420-10	91	163	83	10	8
2720	14.159	15-F16420-8	92	162	84	8	8
2726	11.964	15-F15030-10	89	157	83	10	8
2799	12.340	15-F15030-8	91	156	81	8	8
2844	12.404	15-F15040-8	96	159	81	8	8
3106	16.176	15-F16440-8	97	165	72	8	8
3363	15.066	15-F15040-10	96	160	77	10	8
3513	18.440	15-F16440-10	98	166	67	10	8
13.0" SP							
2084	8.638	15-F15030-7	86	155	93	7	8
2124	11.467	15-F16420-7	92	161	93	7	8
2261	11.829	15-F16420-10	94	163	90	10	8
2403	12.530	15-F16440-7	96	164	83	7	8
2495	13.243	15-F16420-8	91	162	91	8	8
2524	10.858	15-F15030-10	85	157	90	10	8
2526	11.074	15-F15030-8	88	156	88	8	8
2558	11.086	15-F15040-8	95	159	88	8	8
2940	15.365	15-F16440-8	96	165	78	8	8

CFM	BHP	MODEL	DBA @ 5'	CURVE NO.	% OF PEAK SP	INLET DIA.	OUTLET DIA.
13.0" SP *(continued)*							
3173	13.975	15-F15040-10	96	160	84	10	8
3323	17.511	15-F16440-10	98	166	73	10	8
14.0" SP							
1540	6.487	15-F15030-7	86	155	100	7	8
1912	10.420	15-F16420-10	88	163	97	10	8
2175	9.178	15-F15030-8	86	156	94	8	8
2192	11.425	15-F16440-7	92	164	89	7	8
2200	9.447	15-F15040-8	94	159	94	8	8
2209	11.946	15-F16420-8	88	162	98	8	8
2236	9.392	15-F15030-10	86	157	97	10	8
2751	14.427	15-F16440-8	96	165	84	8	8
2941	12.747	15-F15040-10	93	160	90	10	8
3125	3.647	15-F16440-10	97	166	78	10	8
15.0" SP							
1906	10.043	15-F16440-7	92	164	96	7	8
2523	13.277	15-F16440-8	95	165	90	8	8
2608	11.489	15-F15040-10	94	160	97	10	8
2917	15.905	15-F16440-10	93	166	84	10	8
16.0" SP							
2214	11.657	15-F16440-8	96	165	96	8	8
2696	14.892	15-F16440-10	94	166	90	10	8
17.0" SP							
2461	13.435	15-F16440-10	94	166	95	10	8

SPARK RESISTANT CONSTRUCTION

TYPE A
All parts of the fan in contact with the air or gas being handled shall be made of non-ferrous material.

TYPE B
Fan shall have entirely non-ferrous wheel and a non-ferrous ring about the opening through which the shaft passes.

TYPE C
Fan shall be so constructed that a shift of the wheel or shaft will not permit two ferrous parts of the fan to rub or strike.

Model AF meets the requirements of Type A Spark Resistant Construction
(with the exception of the shaft) since they have aluminum wheels and housings.

HI-TEMPERATURE CONSTRUCTION

All AF arrangements with cast aluminum radial or backward curve wheels can be operated with airstream temperatures up to 200°F. Blowers with aluminum forward curve wheels can be operated with airstream temperatures up to 150°F. Higher temperature construction up to 700°F is available with welded steel construction (radial wheels only) and welded steel housings in arrangements 1, 8, and 9.

CONVERSION FACTORS

Volume — cubic meters/sec. x 2119 = cubic feet/min. (CFM)
Pressure — Pascals (N/m²) x 0.004 = inches water
Power — kilowatts (Kw) x 1.341 = horsepower
Length — centimeters (cm) x 0.3937 = inches
Temperature — (°C x 1.8) + 32 = °F

DISCHARGE POSITIONS

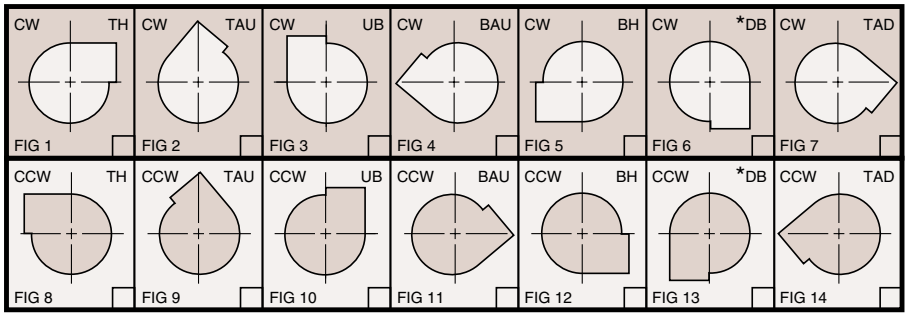

NOTE:
Rotation is viewed from driven side.

NOTE:
Downblast discharge not available with outlet flange.

ARR'T 4 CAST ALUMINUM BASE

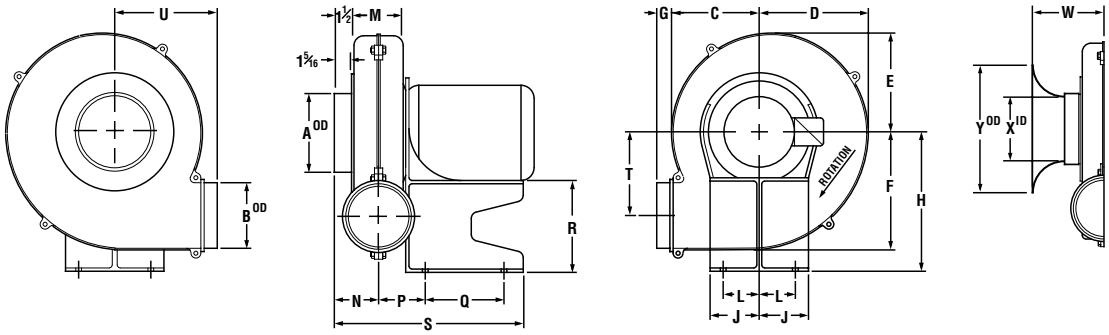

NOTES:

① Outlet flange not available on DB discharge

② For flange details, see drawing AFA11421F

③ Housing, wheel, and base constructed of cast aluminum

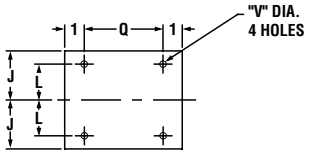

ALL DIMENSIONS SHOWN IN INCHES

FAN SIZE	MOTOR FRAME SIZE	INLET DIA. A	OUTLET DIA. B	C	D	E	F	G	H	J	K	L	M	N	P	Q	R	S	T	U	V	NET WTS. NO MOTOR LBS.
AF-8	56-C, 143-TC, 145-TC	3	4	4 5/16	5 13/16	5 3/32	6 11/16	1 3/8	8½	3¾	1⅛	2¾	3½	2⅞	2⅞	5	5	11¾	4 9/16	6 5/16	7/16	25
		4																				
AF-9	56-C, 143-TC, 145-TC	4	4	6	7¼	6 17/32	7¾	1 3/16	10½	3¾	1 3/16	2¾	3¾	3 1/16	3 1/16	6	7	13⅛	5⅝	7 3/16	7/16	33
		5																				
AF-10	56-C, 143-T, 145-TC	6	5	6 11/16	8 9/16	7 15/32	9	1⅛	10½	3¾	1½	2¾	3¾	3⅜	3 1/16	6	7	14 7/16	6⅜	7 13/16	7/16	39

MOTORS	
FRAME SIZE	WT. LBS.
56-C	24
143-TC	33
145-TC	45

FAN SIZE	INLET DIA.	INLET BELL		
		W	X	Y
AF-8	3	4¼	2⅝	5¼
AF-8	4	4¾	3⅝	7¼
AF-9	4	4 15/16		
AF-9	5	5 7/16	4⅝	9¼
AF-10	6	6 3/16	5½	11

ARR'T 4 STEEL BASE

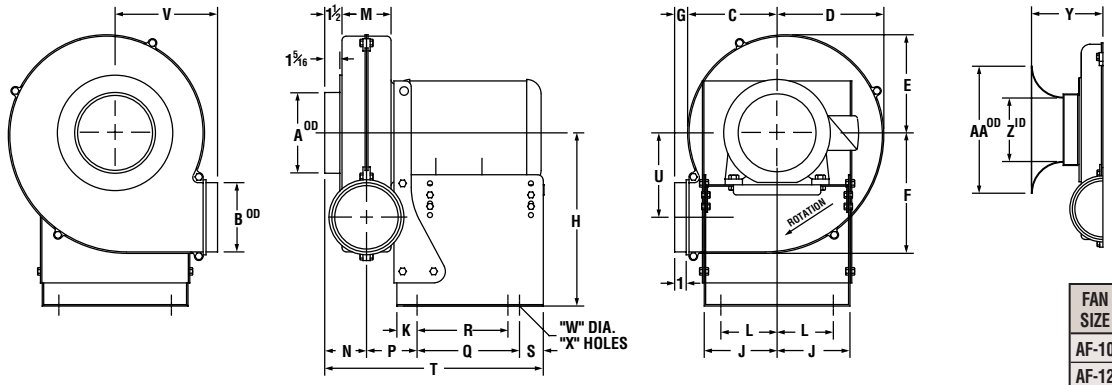

FAN SIZE	INLET DIA.	INLET BELL		
		Y	Z	AA
AF-10	6	6 3/16	5½	11
AF-12	7	6 15/16	6½	13
AF-15	7	7¾		
AF-15	8	8¼	7½	15
AF-15	10	9¼	9½	19

NOTES:

① AF-15 with 182T/184-T frame motor is not available in DB discharge

② AF-15, Add 7/8" to dimensions "P" & "T" for DB discharge (213T, 215T, 254T, 284TS, 286TS only)

③ AF-15 not available with 56 or 56C frame motors

④ For flange details, see drawing AFA11421F

⑤ Motor base is field adjustable to accept motor frames as shown

⑥ All sizes "DB" discharge only available less outlet flange

ALL DIMENSIONS SHOWN IN INCHES

FAN SIZE	MOTOR FRAME SIZE	INLET DIA. A	OUTLET DIA. B	C	D	E	F	G	H	J	K	L	M	N	P	Q	R	S	T	U	V	W	X	NET WTS. NO MOTOR LBS.
AF-10	56, 143T, 145T, 56C, 143TC, 145TC, 182T	6	5	6 11/16	8 5/16	7 15/32	9	1⅛	11½	5	1 1/16	4	3¾	3⅜	3⅛	8	7	13/16	15 5/16	6⅜	7 13/16	½	6	39
AF-12	56, 143T, 145T, 56C, 143TC, 145TC, 182T, 184T	7	6	7¾	9¼	8½	10 7/16	1⅛	11½	5	1 1/16	4	4¼	3⅝	3⅜	8	7	13/16	15 13/16	7 5/16	8⅞	½	6	46
AF-12	213T, 215T	7	6	7¾	9¼	8½	10 7/16	1⅛	11½	6 5/16	1 1/16	4⅞	4¼	3⅝	4 1/16	8⅞	–	2 1/16	18⅝	7 5/16	8⅞	9/16	4	46
AF-15	143T, 145T, 182T, 184T, 213T, 215T	7	8	9⅜	11	10	12	1 9/16	15	6 5/16	1¾	4⅞	5⅞	4 7/16	② 5⅛	8⅞	–	2 1/16	② 20½	7⅞	10 15/16	9/16	4	79
		8																						
		10																						
AF-15	254T, 256T, 284TS, 286TS	7	8	9⅜	11	10	12	1 9/16	15	7	1¾	4⅞	5⅞	4 7/16	② 5⅛	16¼	–	2	② 27 13/16	7⅞	10 15/16	1 1/16	4	121
		8																						
		10																						

MOTORS	
FRAME SIZE	WT. LBS.
56C	24
143T	32
145T	40
182T	58
184T	70
213T	100
215T	130
254T	240
256T	300
284TS	403
286TS	420

ARR'T 4 INLET FLANGE MOUNT

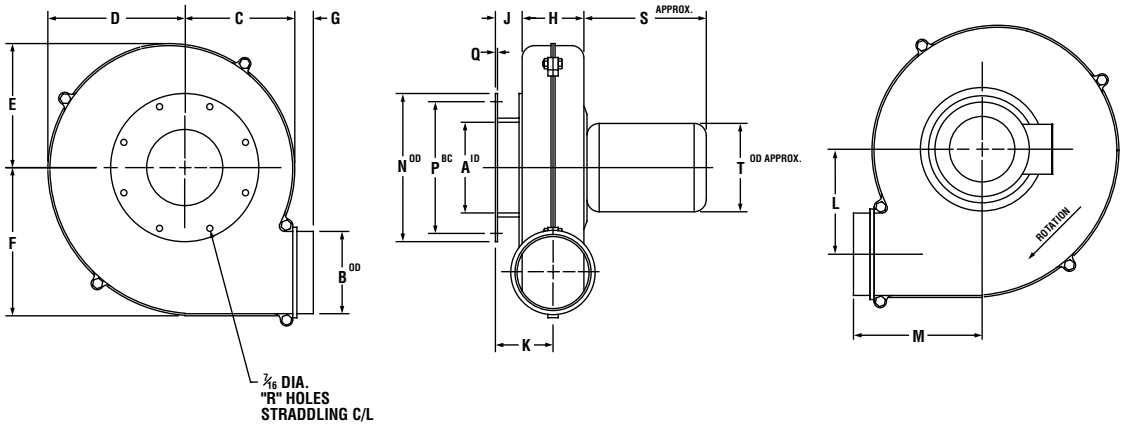

ALL DIMENSIONS SHOWN IN INCHES

FAN SIZE	MOTOR FRAME SIZE	INLET DIA. A	OUTLET DIA. B	C	D	E	F	G	H	J	K	L	M	N	P	Q	R	NET WTS. NO MOTOR LBS.
AF-8	56-C, 143-TC, 145-TC	2 9/16	4	4 15/16	5 13/16	5 3/32	6 11/16	1 3/8	3 1/2	1 3/8	3 1/8	4 9/16	6 5/16	7 1/2	6	1/4	4	14
		3 9/16												9	7 1/2		8	
AF-9	56-C, 143-TC, 145-TC	3 9/16	4	6	7 1/4	6 17/32	7 3/4	1 3/16	3 3/4	1 7/16	3 5/16	5 5/8	7 3/16	9	7 1/2	1/4	8	20
		4 9/16												10	8 1/2			
AF-10	56-C, 143-TC, 145-TC	5 1/2	5	6 11/16	8 5/16	7 15/32	9	1 1/8	3 3/4	1 13/16	3 11/16	6 3/8	7 13/16	11	9 1/2	1/4	8	35
AF-12	56-C, 143-TC, 145-TC 182-TC, 184-TC	6 1/4	6	7 3/4	9 1/4	8 1/2	10 7/16	1 1/8	4 1/4	1 13/16	3 15/16	7 5/16	8 7/8	11	9 1/2	5/16	8	40
AF-15	143-TC, 145-TC, 182-TC, 184-TC, 213-TC, 215-TC	6 1/4	8	9 3/8	11	10	12	1 9/16	5 7/8	2	4 15/16	7 7/8	10 15/16	11	9 1/2	1/2	8	56
		7 1/2												13 1/2	11 3/4		8	
		9 11/16												16	14 1/4		12	

MOTORS			
FRAME SIZE	WT. LBS.	S	T
56-C	25	11 1/2	6 1/4
143-TC	33	11 1/2	7
145-TC	45	11 1/2	7
182-TC	60	14 1/2	9
184-TC	70	14 1/2	9
213-TC	120	16	10 1/2
215-TC	140	16	10 1/2

NOTES:

① For optional outlet flange, see drawing AFA11421F

② Inlet flange is welded to inlet side housing

③ Housing, flange, and wheel are constructed of cast aluminum

ARR'T 4 OUTLET FLANGE MOUNT

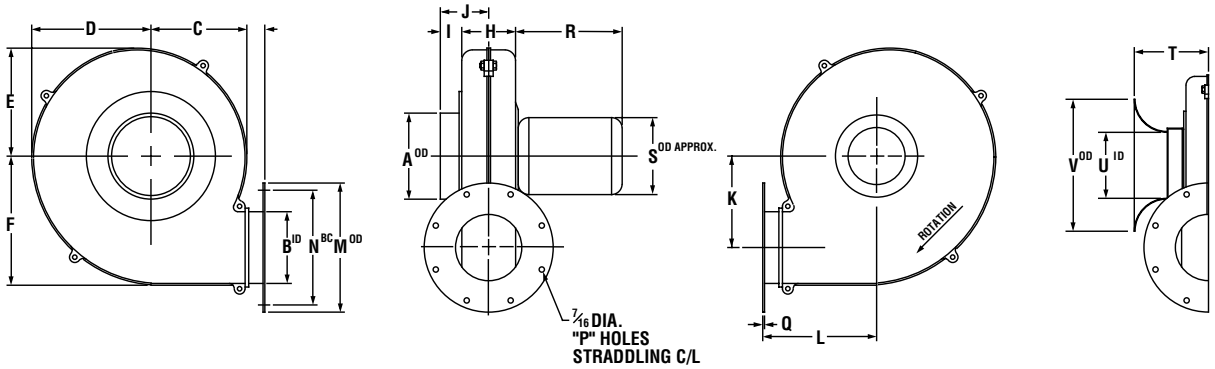

ALL DIMENSIONS SHOWN IN INCHES

FAN SIZE	MOTOR FRAME SIZE	INLET DIA. A	OUTLET DIA. B	C	D	E	F	G	H	I	J	K	L	M	N	P	Q	NET WTS. NO MOTOR LBS.
AF-8	56-C, 143-TC, 145-TC	3	3 9/16	4 15/16	5 13/16	5 3/32	6 11/16	1 5/8	3 1/2	1 1/8	2 7/8	4 9/16	6 9/16	9	7 1/2	8	1/4	14
		4																
AF-9	56-C, 143-TC, 145-TC	4	3 9/16	6	7 1/4	6 17/32	7 3/4	1 7/16	3 3/4	1 3/16	3 1/16	5 5/8	7 7/16	9	7 1/2	8	1/4	20
		5																
AF-10	56-C, 143-TC, 145-TC	6	4 9/16	6 11/16	8 5/16	7 15/16	9	1 3/8	3 3/4	1 1/2	3 3/8	6 3/8	8 1/16	10	8 1/2	8	5/16	35
AF-12	56-C, 143-TC, 145-TC 182-TC, 184-TC	7	5 1/2	7 3/4	9 1/4	8 1/2	10 7/16	1 7/16	4 1/4	1 1/2	3 5/8	7 5/16	9 3/16	11	9 1/2	8	5/16	40
AF-15	143-TC, 145-TC, 182-TC, 213-TC, 215-TC	7	7 1/2	9 3/8	11	10	12	2 1/16	5 7/8	1 1/2	4 7/16	7 7/8	11 7/16	13 1/2	11 3/4	8	5/16	56
		8															1/2	
		10															1/2	

MOTORS			
FRAME SIZE	WT. LBS.	S	T
56-C	25	11 1/2	6 1/4
143-TC	33	11 1/2	7
145-TC	45	11 1/2	7
182-TC	60	14 1/2	9
184-TC	70	14 1/2	9
213-TC	120	16	10 1/2
215-TC	140	16	10 1/2

FAN SIZE	INLET DIA.	INLET BELL		
		T	U	V
AF-8	3	4 1/4	2 5/8	5 1/4
AF-8	4	4 3/4	3 5/8	7 1/4
AF-9	4	4 15/16		
AF-9	5	5 7/16	4 5/8	9 1/4
AF-10	6	6 3/16	5 1/2	11
AF-12	7	6 15/16	6 1/2	13
AF-15	7	7 3/4		
AF-15	8	8 1/4	7 1/2	15
AF-15	10	9 1/4	9 1/2	19

NOTES:

① For optional inlet flange, see drawing AFA11421F

② Inlet flange is welded to motor side housing and bolted to inlet side housing

③ Housing, flange, and wheel are constructed of cast aluminum

ARR'T 1

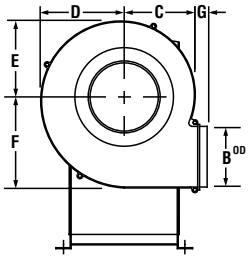

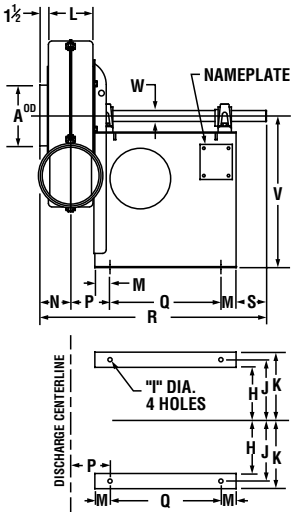

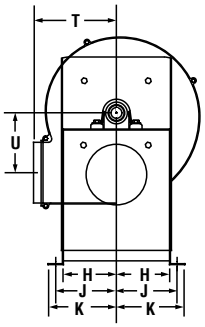

CW - BH UNIT SHOWN

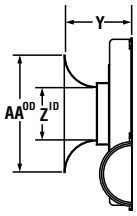

NOTES:

① For DB discharge, add 7/8" to "P" and "R" dimensions

② Outlet flange not available on DB discharge

③ Housing and wheel constructed of cast aluminum, base is steel

④ For flange details, see drawing AFA11421F

BEARING PEDESTAL IS PREPUNCHED FOR FOLLOWING MOTOR SLIDE BASES	
AF-8	56, 143-T, 145-T, 182-T, 184-T
AF-9	
AF-10	
AF-12	
AF-15	56, 143-T, 145-T, 182-T, 184-T, 213-T, 215-T

ALL DIMENSIONS SHOWN IN INCHES

FAN SIZE	INLET DIA. A	OUTLET DIA. B	C	D	E	F	G	H	I	J	K	L	M	N	① P	Q	① R	S	T	U	V	STANDARD DUTY W	STANDARD DUTY KEYWAY	STANDARD DUTY WEIGHTS LBS.	HEAVY DUTY W	HEAVY DUTY KEYWAY	HEAVY DUTY WEIGHTS LBS.
AF-8	3	4	4 15/16	5 13/16	5 3/32	6 11/16	1 3/8	4	7/16	5	6	3 1/2	1	2 7/8	3	12	21 7/8	3	6 5/16	4	15	3/4	1/4 x 1/8	36	1	1/4 x 1/8	41
	4																										
AF-9	4	4	6	7 1/4	6 17/32	7 3/4	1 3/8	4	7/16	5	6	3 3/4	1	3 1/16	3 1/8	12	22 3/16	3	7 3/16	5 5/8	15	3/4	1/4 x 1/8	39	1	1/4 x 1/8	45
	5																										
AF-10	6	5	6 11/16	8 5/16	7 15/32	9	1 1/8	5	9/16	6	7	3 3/4	1	3 3/8	3 1/8	12	22 1/2	3	7 13/16	6 3/8	15	1	1/4 x 1/8	49	1 3/16	1/4 x 1/8	58
AF-12	7	6	7 3/4	9 1/4	8 1/2	10 7/16	1 1/8	5	9/16	6	7	4 1/4	1	3 5/8	3 3/8	12	23	3	8 7/8	7 5/16	15	1	1/4 x 1/8	52	1 3/16	1/4 x 1/8	63
AF-15	7	8	9 3/8	11	10	12	1 9/16	7	9/16	8	9	5 7/8	2	4 7/16	5 3/16	14 5/8	30 1/4	4	10 15/16	7 7/8	20	1 7/16	3/8 x 3/16	94	1 11/16	3/8 x 3/16	118
	8																										
	10																										

FAN SIZE	INLET DIA.	INLET BELL Y	INLET BELL Z	INLET BELL AA
AF-8	3	4 1/4	2 5/8	5 1/4
AF-8	4	4 3/4	3 5/8	7 1/4
AF-9	4	4 15/16		
AF-9	5	5 7/16	4 5/8	9 1/4
AF-10	6	6 3/16	5 1/2	11
AF-12	7	6 15/16	6 1/2	13
AF-15	7	7 3/4		
AF-15	8	8 1/4	7 1/2	15
AF-15	10	9 1/4	9 1/2	19

ARR'T 9

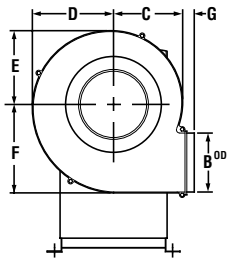

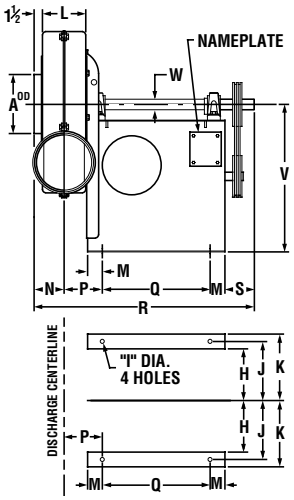

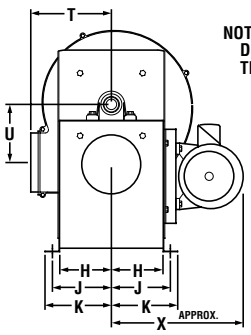

NOTE:
DRIVES REMOVED THIS VIEW

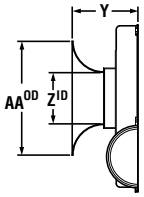

NOTES:

① For DB discharge, add 7/8" to "P" and "R" dimensions

② Outlet flange not available on DB discharge

③ Housing and wheel constructed of cast aluminum, base is steel

④ For flange details, see drawing AFA11421F

MOTORS							
FRAME SIZE	WT. LBS.	AF-8, AF-9 BELT CD	AF-8, AF-9 X	AF-10, AF-12 BELT CD	AF-10, AF-12 X	AF-15 BELT CD	AF-15 X
56	45	11.9	12 5/8	12.8	13 5/8	15.3	15 5/8
143T	50						
145T	58						
182T	94	12.9	14 3/4	13.9	15 3/4	16.4	17 3/4
184T	110						
213T	164	N/A		N/A		17.2	19 5/8
215T	186						

ALL DIMENSIONS SHOWN IN INCHES

FAN SIZE	INLET DIA. A	OUTLET DIA. B	C	D	E	F	G	H	I	J	K	L	M	N	① P	Q	① R	S	T	U	V	STANDARD DUTY W	STANDARD DUTY KEYWAY	STANDARD DUTY NET WTS. NO MOTOR LBS.	HEAVY DUTY W	HEAVY DUTY KEYWAY	HEAVY DUTY NET WTS. NO MOTOR LBS.
AF-8	3	4	4 15/16	5 13/16	5 3/32	6 11/16	1 3/8	4	7/16	5	6	3 1/2	1	2 7/8	3	12	21 7/8	3	6 5/16	4	15	3/4	1/4 x 1/8	36	1	1/4 x 1/8	41
	4																										
AF-9	4	4	6	7 1/4	6 17/32	7 3/4	1 3/8	4	7/16	5	6	3 3/4	1	3 1/16	3 1/8	12	22 3/16	3	7 3/16	5 5/8	15	3/4	1/4 x 1/8	39	1	1/4 x 1/8	45
	5																										
AF-10	6	5	6 11/16	8 5/16	7 15/32	9	1 1/8	5	9/16	6	7	3 3/4	1	3 3/8	3 1/8	12	22 1/2	3	7 13/16	6 3/8	15	1	1/4 x 1/8	49	1 3/16	1/4 x 1/8	58
AF-12	7	6	7 3/4	9 1/4	8 1/2	10 7/16	1 1/8	5	9/16	6	7	4 1/4	1	3 5/8	3 3/8	12	23	3	8 7/8	7 5/16	15	1	1/4 x 1/8	52	1 3/16	1/4 x 1/8	63
AF-15	7	8	9 3/8	11	10	12	1 9/16	7	9/16	8	9	5 7/8	2	4 7/16	5 3/16	14 5/8	30 1/4	4	10 15/16	7 7/8	20	1 7/16	3/8 x 3/16	94	1 11/16	3/8 x 3/16	118
	8																										
	10																										

FAN SIZE	INLET DIA.	INLET BELL Y	INLET BELL Z	INLET BELL AA
AF-8	3	4 1/4	2 5/8	5 1/4
AF-8	4	4 3/4	3 5/8	7 1/4
AF-9	4	4 15/16		
AF-9	5	5 7/16	4 5/8	9 1/4
AF-10	6	6 3/16	5 1/2	11
AF-12	7	6 15/16	6 1/2	13
AF-15	7	7 3/4		
AF-15	8	8 1/4	7 1/2	15
AF-15	10	9 1/4	9 1/2	19

ARR'T 2

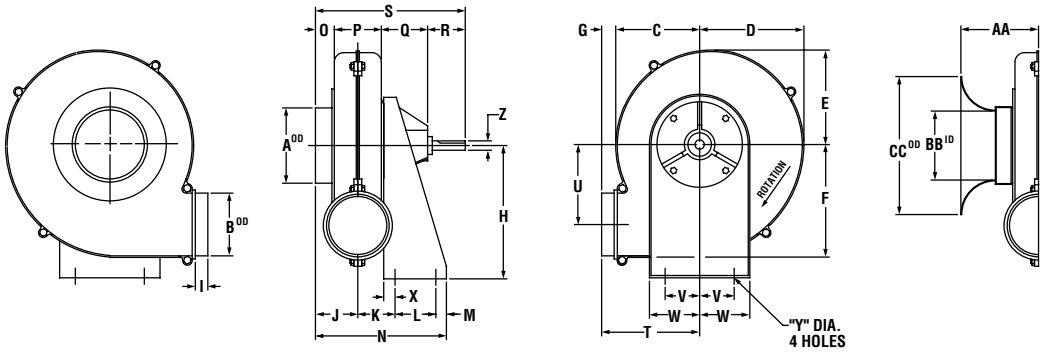

ALL DIMENSIONS SHOWN IN INCHES

FAN SIZE	INLET DIA. A	OUTLET DIA. B	C	D	E	F	G	H	J	K	L	M	N	O	P	Q	R	S	T	U	V	W	X	Y	SHAFT DIA. Z	KEYWAY	NET WT. NO MOTOR LBS.
AF-8	3	4	4 15/16	5 13/16	5 3/32	6 11/16	1 3/8	10	2 7/8	2 7/8	3 1/4	3/4	9 3/4	1 1/8	3 1/2	3 11/16	3	11 5/16	6 5/16	4 9/16	2 7/8	4	1	7/16	3/4	1/4 x 1/8	27
	4																										
AF-9	4	4	6	7 1/4	6 17/32	7 3/4	1 3/16	10	3 1/16	2 31/32	3 1/4	3/4	10 1/32	1 3/16	3 3/4	3 11/16	3	11 5/8	7 3/16	5 5/8	2 7/8	4	1	7/16	3/4	1/4 x 1/8	33
	5																										
AF-10	6	5	6 11/16	8 5/16	7 15/32	9	1 1/8	10	3 3/8	2 31/32	3 1/4	3/4	10 11/32	1 1/2	3 3/4	3 11/16	3	11 15/16	7 13/16	6 3/8	2 7/8	4	1	7/16	3/4	1/4 x 1/8	47
AF-12	7	6	7 3/4	9 1/4	8 1/2	10 7/16	1 1/8	11 1/2	3 5/8	3 13/16	4 1/2	1 1/4	12 25/32	1 1/2	4 1/4	5 9/16	4	15 5/16	8 7/8	7 5/16	3 1/8	4 1/2	1 1/4	3/4	1	1/4 x 1/8	70
AF-15	7	8	9 3/8	11	10	12	1 9/16	15	4 7/16	4 3/8	4 1/2	1 1/4	14 9/16	1 1/2	5 7/8	5 9/16	4	16 15/16	10 15/16	7 7/8	3 3/4	5	1 1/4	3/4	1 7/16	3/8 x 3/16	93
	8																										
	10																										

FAN SIZE	INLET DIA.	INLET BELL AA	BB	CC
AF-8	3	4 1/4	2 5/8	5 1/4
AF-8	4	4 3/4	3 5/8	7 1/4
AF-9	4	4 15/16		
AF-9	5	5 7/16	4 5/8	9 1/4
AF-10	6	6 3/16	5 1/2	11
AF-12	7	6 15/16	6 1/2	13
AF-15	7	7 3/4		
AF-15	8	8 1/4	7 1/2	15
AF-15	10	9 1/4	9 1/2	19

NOTES:

① Outlet flange not available on DB discharge

② For flange details, see drawing AFA11421F

③ Housing, wheel and base constructed of cast aluminum, bearing housing constructed of cast iron

ARR'T 8

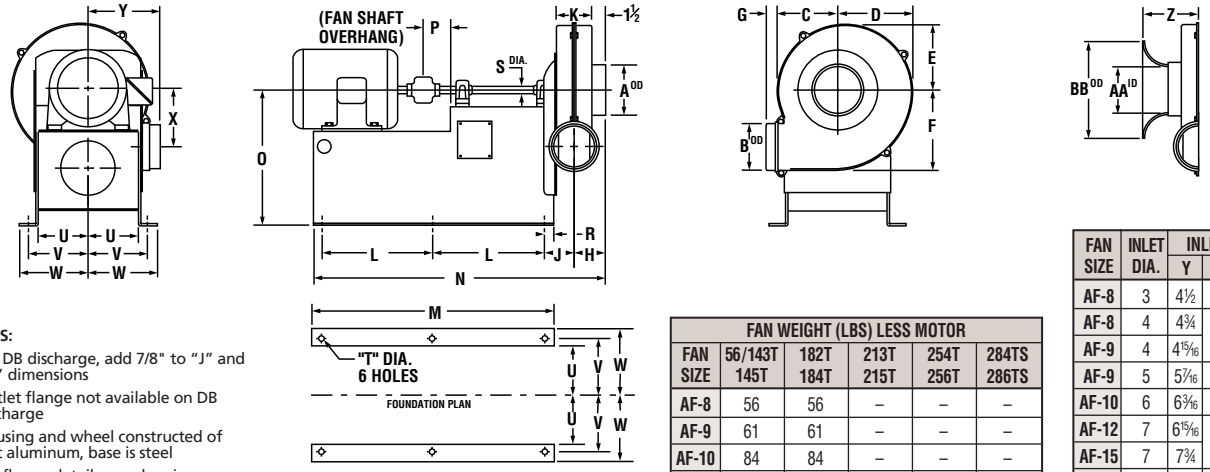

NOTES:

① For DB discharge, add 7/8" to "J" and "N" dimensions

② Outlet flange not available on DB discharge

③ Housing and wheel constructed of cast aluminum, base is steel

④ For flange details, see drawing AFA11421F

FAN WEIGHT (LBS) LESS MOTOR					
FAN SIZE	56/143T 145T	182T 184T	213T 215T	254T 256T	284TS 286TS
AF-8	56	56	–	–	–
AF-9	61	61	–	–	–
AF-10	84	84	–	–	–
AF-12	90	90	95	–	–
AF-15	152	152	156	156	168

FAN SIZE	INLET DIA.	INLET BELL Y	Z	AA
AF-8	3	4 1/2	2 5/8	11
AF-8	4	4 3/4	3 5/8	13
AF-9	4	4 15/16		
AF-9	5	5 7/16	4 5/8	15
AF-10	6	6 3/16	5 1/2	11
AF-12	7	6 15/16	6 1/2	13
AF-15	7	7 3/4		
AF-15	8	8 1/4	7 1/2	15
AF-15	10	9 1/4	9 1/2	19

MOTORS FRAME SIZE	WT. LBS.
56	45
143T	45
145T	52
182T	85
184T	100
213T	150
215T	170
254T	260
256T	290
284TS	390
286TS	440

ALL DIMENSIONS SHOWN IN INCHES

FAN SIZE	INLET DIA. A	OUTLET DIA. B	C	D	E	F	G	H	J①	K	56 / 143T / 145T L	M	N①	182T / 184T L	M	N①	213T / 215T L	M	N①	254T / 256T L	M	N①	284TS / 286TS L	M	N①	P	Q	R	STANDARD DUTY S	KEYWAY	HEAVY DUTY S	KEYWAY	T	U	V	W	X	Y
AF-8	3	4	4 15/16	5 13/16	5 3/32	6 11/16	1 3/8	2 7/8	3	3 1/2	11 3/16	24 3/8	29 1/4	11 15/16	25 7/8	30 3/4	—	—	—	—	—	—	—	—	—	3	15	1	3/4	3/16 x 3/32	1	1/4 x 1/8	7/16	4 1/2	5 1/2	6 1/2	4 9/16	6 5/16
	4																																					
AF-9	4	4	6	7 1/4	6 17/32	7 3/4	1 3/16	3 1/16	3 1/8	3 3/4	11 3/16	24 3/8	29 9/16	11 15/16	25 7/8	31 1/16	—	—	—	—	—	—	—	—	—	3	15	1	3/4	3/16 x 3/32	1	1/4 x 1/8	7/16	4 1/2	5 1/2	6 1/2	5 5/8	7 3/16
	5																																					
AF-10	6	5	6 11/16	8 5/16	7 15/32	9	1 1/8	3 3/8	3 1/8	3 3/4	11 1/2	25	30 1/2	12 1/4	26 1/2	32	—	—	—	—	—	—	—	—	—	3	15	1	1	1/4 x 1/8	1 3/16	1/4 x 1/8	9/16	4 1/2	5 1/2	6 1/2	6 3/8	7 13/16
AF-12	7	6	7 3/4	9 1/4	8 1/2	10 7/16	1 1/8	3 5/8	3 3/8	4 1/4	11 1/2	25	31	12 1/4	26 1/2	32 1/2	15 5/16	32 5/8	38 5/8	—	—	—	—	—	—	3	15	1	1	1/4 x 1/8	1 3/16	1/4 x 1/8	9/16	5 1/2	6 1/2	7 1/2	7 5/16	8 7/8
AF-15	7	8	9 3/8	11	10	12	1 9/16	4 7/16	5 3/16	5 7/8	12 3/8	28 3/8	36 3/8	13 3/8	30 3/4	38 3/8	14 13/16	33 5/8	41 1/4	17 7/8	39 3/4	47 3/8	18 3/8	40 3/4	48 3/8	4	20	2	1 7/16	3/8 x 3/16	1 11/16	3/8 x 3/16	9/16	7	8	9	7 7/8	10 15/16
	8																																					
	10																																					

FLANGES

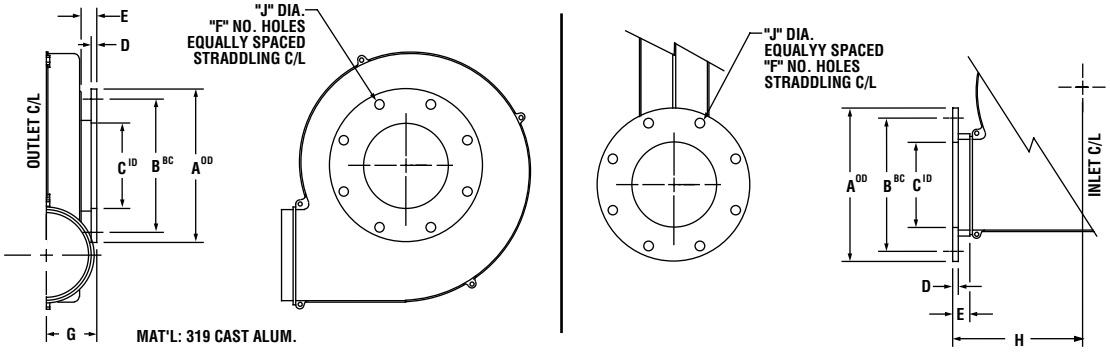

FAN SIZE	INLET	OUTLET	A	B	C	D	E	F	G	H	MATCHES 125/150 lb. ANSI FLANGE BOLT PATTERN		MATCHES 125/150 lb. ANSI FLANGE BOLT PATTERN EXCEPT HOLE DIA. = 7/16 (AFC STANDARD)	
											J	PART NUMBER	J	PART NUMBER
AF-8	3	X	7½	6	2 9/16	¼	1¼	4	3⅛	—	¾	24149F	7/16	24149F-7/16
	4	4	9	7½	3 9/16	¼	1¼	8	3⅛	6 9/16	¾	24101F	7/16	24101F-7/16
AF-9	4	4	9	7½	3 9/16	¼	1¼	8	3 5/16	7 7/16	¾	24101F	7/16	24101F-7/16
	5	X	10	8½	4 9/16	¼	1¼	8	3 5/16	—	¾	24103F	7/16	24103F-7/16
AF-10	X	5	10	8½	4 9/16	¼	1¼	8	—	8⅛	¾	24103F	7/16	24103F-7/16
	6	X	11	9½	5½	5/16	1¼	8	3⅝	—	⅞	24106F	7/16	24106F-7/16
AF-12	X	6	11	9½	5½	5/16	1¼	8	—	9 3/16	⅞	24106F	7/16	24106F-7/16
	7*	X	11	9½	6¼	5/16	1¼	8	3 15/16	—	⅞	24129F	7/16	24129F-7/16
AF-15	7*	X	11	9½	6¼	5/16	1¼	8	4¾	—	⅞	24129F	7/16	24129F-7/16
	8	8	13½	11¾	7½	½	1½	8	4 15/16	11 7/16	⅞	24044F	7/16	24044F-7/16
	10	X	16	14¼	9 11/16	½	1½	12	4 15/16	—	1	24130F	7/16	24130F-7/16

*O.D. and B.C. match 6" ANSI flange

FULL CUT-OFF DAMPERS

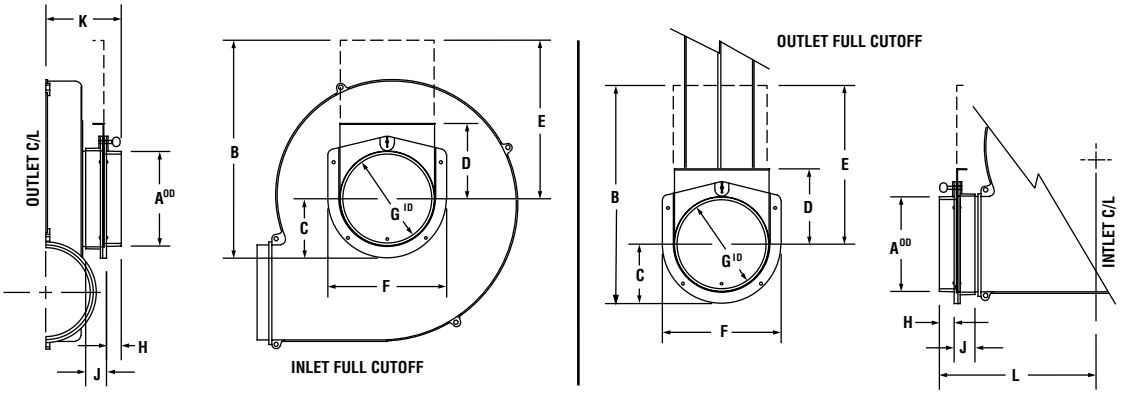

INLET	OUTLET	SIZE	PART NO.	A	B	C	D	E	F	G	H	J	K	L
AF-8	—	3"	63649	2 15/16	7⅜	2 3/16	3	5 3/16	4	2½	1¼	1 7/16	5½	8⅛
AF-8	AF-8	4"	63650	3 15/16	9⅞	2¾	3¾	7⅛	5	3½	1¼	1 7/16	5½	8⅛
AF-9	AF-9												5⅝	8 15/16
AF-9	AF-10	5"	63651	4 15/16	12⅝	3⅝	4⅞	9	6¾	4½	1¼	1 7/16	5⅝	9 9/16
AF-10	AF-12	6"	63652	5 15/16	13⅝	3¾	4¾	9⅞	7½	5½	1¼	1 7/16	5⅝	10⅝
AF-12	—	7"	63653	6 15/16	15⅝	4¼	5¼	11⅝	8½	6½	1¼	1 7/16	5⅞	10⅝
AF-15													6 11/16	12 11/16
AF-15	AF-15	8"	63654	7 15/16	18 5/16	5	6 5/16	13 5/16	10	7½	1¼	1 7/16	6 11/16	12 11/16
AF-15	—	10"	63655	9 15/16	22 5/16	6	7 5/16	16 5/16	12	9½	1¾	1 15/16	6 11/16	12 11/16

American Fan Company

2933 Symmes Road, Fairfield, Ohio 45214
Ph. 513-874-2400 Fax 513-870-5577
www.flaktwoods.com